OWNER'S SERVICE MANUAL

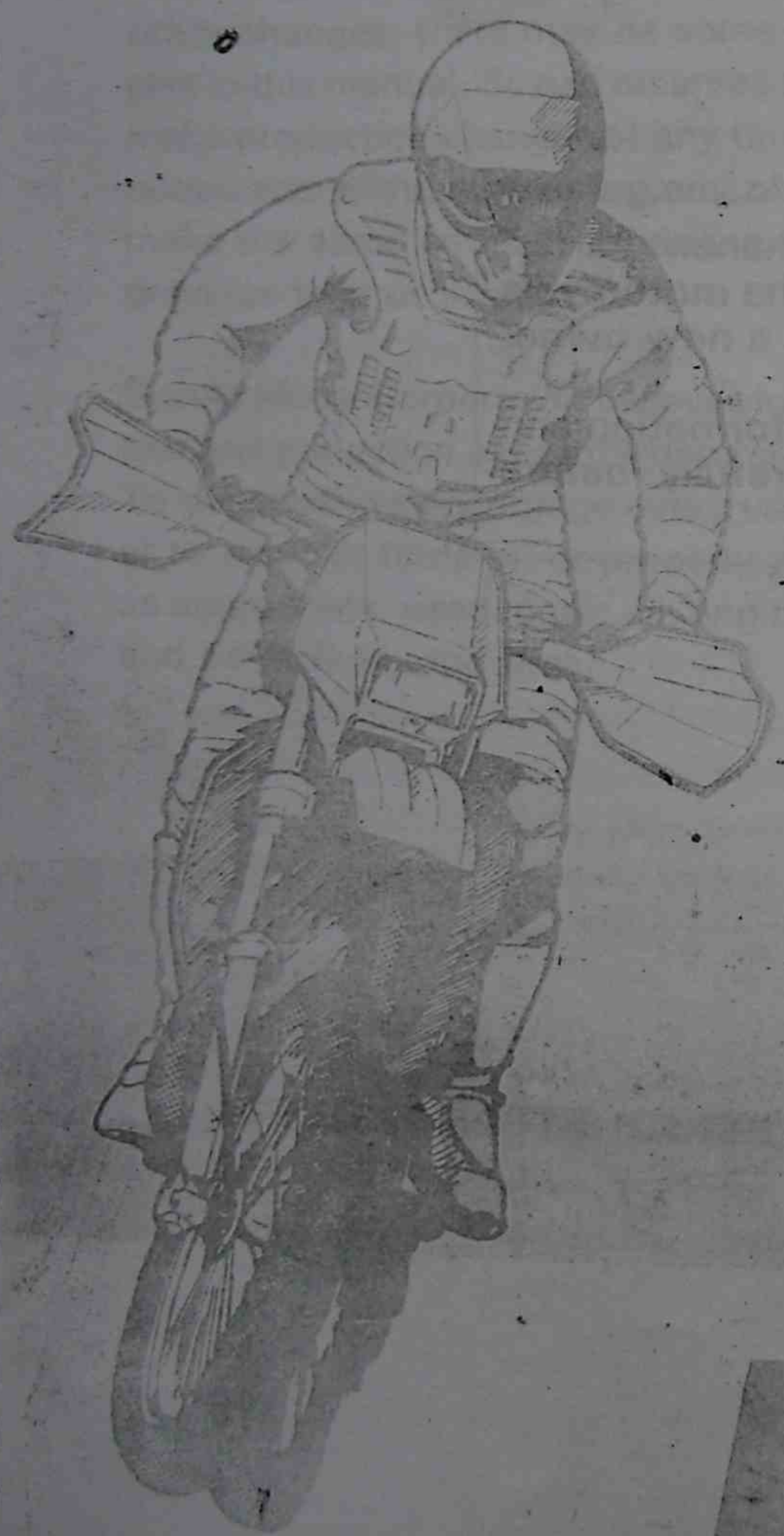

RMX250

FOREWORD

This manual is presented as a means whereby you can maintain your RMX250 in top working condition at all times. Your riding skill and the maintenance steps outlined in this manual will assure you of top performance from your machine under any type of competition.

We sincerely wish you and your Suzuki motorcycle a successful partnership for many years of happy riding.

All information, illustration, photographs and specifications contained in the manual are based on the latest product information available at the time of publication. Due to improvements or other changes, there may be some discrepancies in this manual. Suzuki reserves the right to make production changes at any time, without notice and without incurring any obligation to make the same or similar changes to vehicles previous built or sold.

Suzuki Motor Corporation believes in conservation and protection of Earth's natural resources. To that end, we encourage every vehicle owner to recycle, trade in, or properly dispose of, as appropriate, used motor oil, engine coolant, and other fluid, and tires.

SUZUKI MOTOR CORPORATION

©COPYRIGHT SUZUKI MOTOR CORPORATION 1996

WARNING/CAUTION/NOTE

Please read this manual and follow its instructions carefully. To emphasize special information, the symbol ⚠ and the words WARNING, CAUTION and NOTE have special meanings. Pay special attention to the messages highlighted by these signal words:

⚠ WARNING

Indicates a potential hazard that could result in death or injury.

⚠ CAUTION

Indicates a potential hazard that could result in motorcycle damage.

NOTE: Indicates special information to make maintenance easier or instructions clearer.

THE SPORT OF OFF-HIGHWAY MOTORCYCLING

Your motorcycle and this owner's manual have been designed by people like you who enjoy motorcycling. People become motorcyclists for many reasons. For starters, off-highway riding is fun and invigorating. But no matter why you became a motorcyclist, or how experienced you are, you will eventually face some challenging situations.

In preparing for these challenges, you will be fine-tuning your coordination, concentration, and attitude. Learning the skills and strategies associated with motorcycling is the basis for safety participating in this sport. Many motorcyclists find that as they become better riders, they also get more enjoyment from the freedom unique to motorcycling.

Please remember:

- **Wear a helmet and goggles**
  A helmet is the most important piece of gear to wear. Helmets do not reduce essential vision or hearing. Generally, helmets do not cause or intensify injury if you crash. Helmets simply help your skull protect your intelligence, your memory, your personality, and your life.

  Your eyesight is equally valuable. Wearing suitable eye protection can help keep your vision unblurred by the wind and help shield your eyes from branches and airborne matter like bugs, dirt, or pebbles kicked up by tires. Wear a helmet and eye protection every time you ride.

- **Wear protective gear**
  Wear proper clothing when you ride. Avoid loose clothes or scarves, which could get caught in moving parts. Abrasion injuries can be minimized by wearing protective clothing including gloves, strong boots that fit over the ankle, long pants, and a long sleeve shirt or jackets. Experienced riders often wear a kidney belt and chest or back protector for additional comfort and protection.

- **Inspect your machine before riding**
  Before each use, perform an inspection per "Periodic Inspection" section starting on page 2-1.

- **No Passengers**
  Suzuki RMX are designed for the rider only.

- **Ride with teammates**
  Share the fun of good off-highway ride. A riding partner can also be great help if one of you gets stranded or injured. Of course, your friends will need their own motorcycles because off-road models are not designed for passengers. If none of your friends rides off-highway, ask your Suzuki dealer how to go about joining a club. If your friends do ride, you can all join a club — or start one of your own!

- **Obstacles come with the territory.**
  Negotiating obstacles is a normal part, and often the most fun and challenging part, of off-highway riding. Scan the areas ahead. You may come upon naturally-occuring obstacles such as ruts, bumps, low branches, blind corners, or sudden dropoffs. You may encounter animals, other recreational vehicles, horseback riders, or hikers. The sooner you notice potential obstacles and trail-sharing needs, the sooner you can plan your actions accordingly.

- **Practice on level ground.**
  Your riding skill and mechanical knowledge form the foundation for safe riding practices.

  Before you begin riding, you should find a good place to practice the skills you need to ride safely. Find a flat, open area with enough space to maneuver. Review local laws to make sure you are not trespassing or violating other ordinances. Check with your Suzuki dealer if you do not know where you can ride.

  Review the controls on your motorcycle before riding. Learn to find these controls without looking for them. You will not have time to look for them when your are riding, since you will be concentrating on the terrain.

  Note that your Suzuki is not designed or approved for riding on public roads.

- **Be environmentally conscious.**
  Protect your right to ride. When you ride, remember to keep the terrain in good condition. Tread Lightly! Resist the urge to blaze new trails — stay on established trail systems. Don't destroy plant life. Leave the area better than you found it. Don't litter — pack out what you pack in. Don't bother wildlife. Don't make your exhaust system noisier — complaints about noise are one of the biggest threats to the future of our sport. With every rider projecting a courteous and responsible attitude, riding areas can remain open for all to use in the future.

- **Know your limits.**
  Always ride within the boundaries of your own skills. Knowing these limits and staying within them will help you avoid accidents. Ride at a speed that is appropriate for the visibility and terrain conditions, your motorcycle, and your experience.

  Riding a motorcycle safely requires that your mental and physical skills are fully part of the experience. You should not attempt to operate a motor vehicle, especially one with two wheels, if you are tired or under the influence of alcohol or other drugs, Alcohol, illegal drugs, and even some prescription and over-the-counter drugs can cause drowsiness, loss of coordination, loss of balance, and especially the loss of good judgment. If you are tired or under the influence of alcohol or other drugs, PLEASE DO NOT RIDE your motorcycle.

- **Conclusion.**
  Off-highway visibility and terrain conditions vary. The actions of other riders are unpredictable. Your motorcycle's condition can change. These factors can best be dealt with by giving every ride your full attention.

  Circumstances beyond your control could lead to an accident. You need to prepare for the unexpected by wearing a helmet and other protective gear, and practicing safe riding techniques to minimize the damage to you and your machine.

May all of your rides on your new Suzuki be winning rides!

ACCESSORY USE AND MOTORCYCLE LOADING

There are a great variety of accessories available to Suzuki owners. Suzuki can not have direct control over the quality or suitability of accessories you may wish to purchase. The addition of unsuitable accessories can lead to unsafe operating conditions. It is not possible for Suzuki to test each accessory on the market or combinations of all the available accessories; however, your dealer can assist you in selecting quality accessories and installing them correctly.

Use extreme caution when selecting and installing the accessories for your Suzuki. We have developed some general guidelines which will aid you when deciding whether, and how to equip your motorcycle.

⚠ WARNING

Operating this motorcycle with improper modifications can be hazardous. Improper installation of accessories, or use of incorrect accessories, may cause changes in handling which could lead to an accident.

Never modify the motorcycle with improper installation of accessories, or use of incorrect accessories. All parts and accessories added to the motorcycle should be genuine Suzuki parts or equivalent designed for use on this motorcycle. Install and use them according to their instructions. If you have any questions, contact your Suzuki dealer.

- Any time that additional weight or aerodynamic affecting accessories are installed, they should be mounted as low as possible, as close to the motorcycle and as near the center of gravity as is feasible. The mounting brackets and other attachment hardware should be carefully checked to ensure that they provide for a rigid mount. Weak mounts can allow the shifting of the weight and create a hazardous, unstable condition.
- Inspect for proper ground clearance and bank angle. Improperly mounted load could critically reduce these two safety factors. Also determine that the load does not interfere with the operation of the suspension, steering or other control operations.
- Accessories fitted to the handlebars or the front fork area can create serious stability problems. This extra weight will cause the motorcycle to be less responsive to your steering control. The weight may also cause oscillations in the front end and lead to instability problems. Accessories added to the handlebars or front fork of the machine should be as light as possible and kept to a minimum.
- Certain accessories displace the rider from his or her normal riding position. This limits the freedom of movement of the rider and may limit control ability.
- Additional electrical accessories may overload the existing electrical system. Severe overloads may damage the wiring harness or create a hazardous situation due to the loss of electrical power during the operation of the motorcycle.

If any load is to be carried on the motorcycle, mount it as low as possible and as close as possible to the machine. An improperly mounted load can create a high center of gravity which is very hazardous and makes the motorcycle difficult to handle. The size of the load can also affect the aerodynamics of the motorcycle. Balance the load between the left and right sides of the motorcycle and fasten it securely.

WARNINGS FOR SERVICING

⚠ WARNING

Never run the engine indoors or in a garage. Exhaust gas contains carbon monoxide, a gas that is colorless and odorless and can cause death or severe injury.

Only run the engine outdoors where there is fresh air.

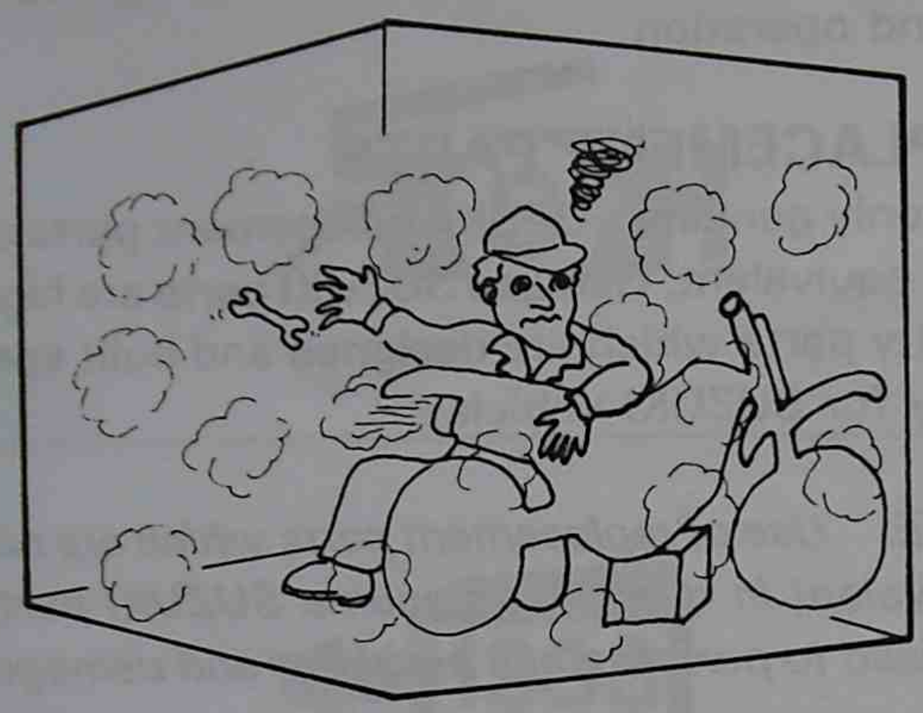

⚠ WARNING

Hot engine and muffler can burn you.

Wait until the engine and muffler cools before servicing.

⚠ WARNING

Fuel can catch on fire if you do not handle it properly. Gasoline vapors can catch fire easily.

Do not smoke when servicing the machine. Do not service the machine in an area where there are open flames or sparks.

⚠ WARNING

Brake fluids and engine coolant can be hazardous to humans and pets. Brake fluid and engine coolant are harmful or fatal if swallowed, and harmful if it comes in contact with your skin or eyes.

Keep brake fluid and engine coolant away from children. Call your doctor immediately if swallowed, and induce vomiting. Flush eyes or skin with water if either brake fluid or engine coolant gets in eyes or comes in contact with skin.

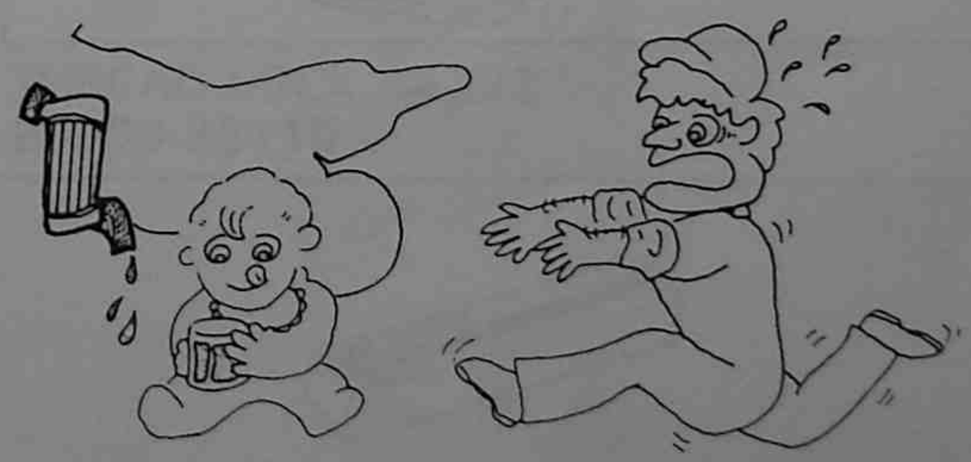

⚠ WARNING

Servicing the machine with engine running can be hazardous. You can be caught in the moving parts such as the drive chain, sprockets etc.

Be sure to stop the engine when servicing the machine.

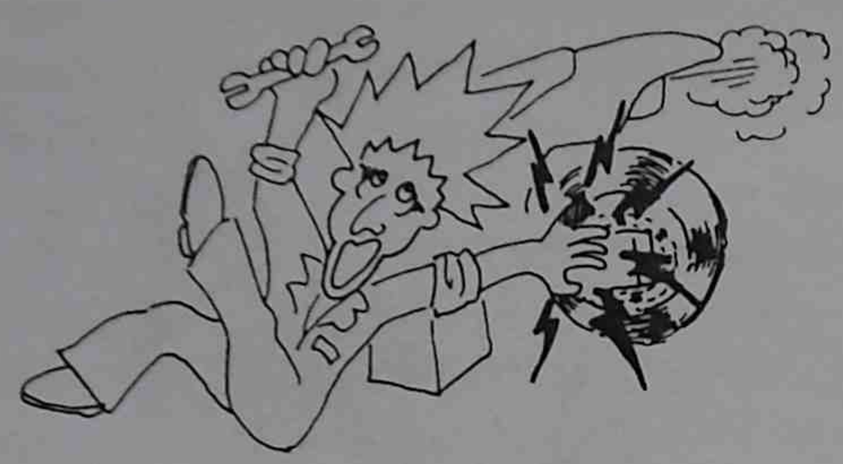

⚠ WARNING

Servicing the machine without proper clothes and protective gear can be hazardous. You can be injured if you do not wear proper clothes and protective gear.

Be sure to wear proper clothes and shoes for servicing and wear protective glasses, mask or gloves as necessary.

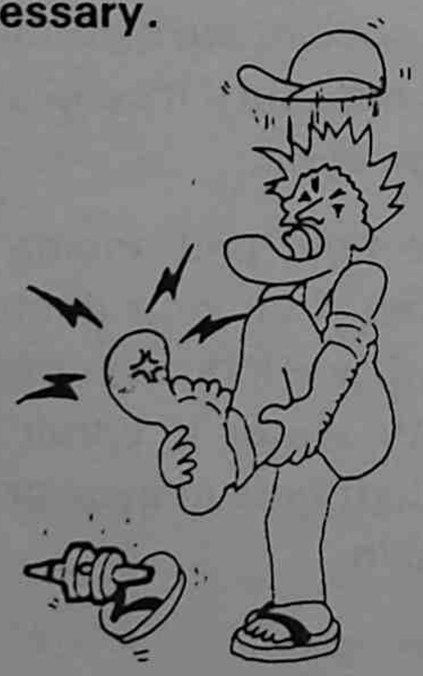

PRECAUTIONS FOR SERVICING

- Replace gaskets, circlips, O-rings and cotter pins with new ones.
- Take care not to expand the end gap larger than required to slip the circlip over the shaft when installing a circlip.
- Use special tools where specified.
- Use genuine SUZUKI parts and recommended oil.
- When two or more persons work together, pay attention to the safety of each other.
- After reassembly, inspect parts for tightness and operation.

REPLACEMENT PARTS

Use only genuine SUZUKI replacement parts or their equivalent. Genuine SUZUKI parts are high quality parts which are designed and built specially for SUZUKI vehicles.

NOTE: Use of replacement parts which are not equivalent in quality to genuine SUZUKI parts can lead to performance problems and damage.

SYMBOL MARKS AND MATERIALS

SYMBOL MARK	MATERIALS
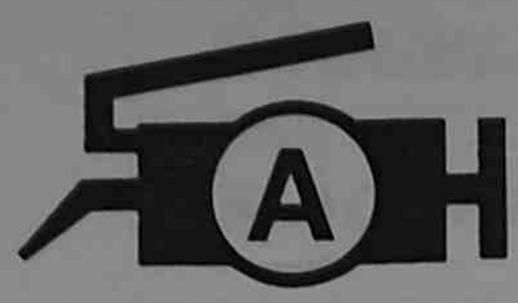	SUZUKI SUPER GREASE "A" 99000-25010
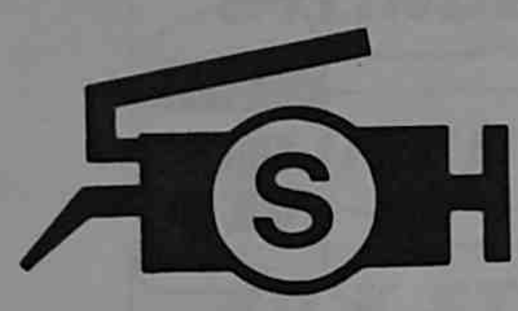	SUZUKI SILICONE GREASE 99000-25100
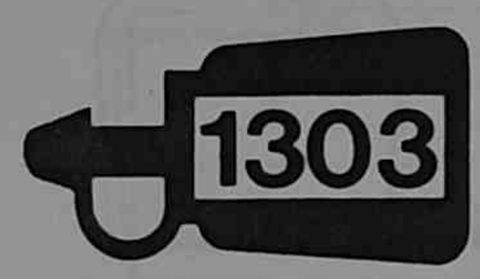	THREAD LOCK SUPER "1303" 99000-32030
	THREAD LOCK SUPER "1360" 99000-32130
	THREAD LOCK "1322" 99000-32110
	SUZUKI BOND 1207B 99000-31140

SYMBOL MARK	MATERIALS
	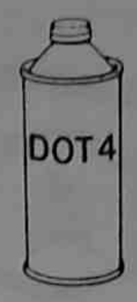 Use or apply DOT4 brake fluid.
	SUZUKI FORK OIL SS-05 99000-99001-SS5
	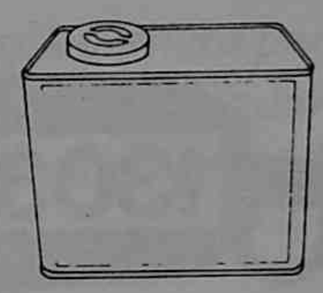 SUZUKI REAR SUSPENSION OIL SS-25 99000-99001-S25
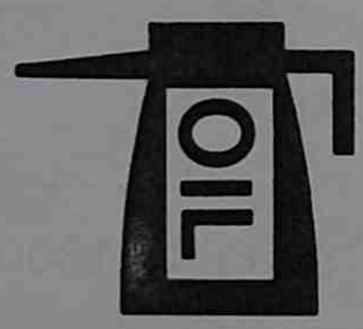	Apply engine oil or transmission oil.
	Tighten a nut or bolt to the specified torque.
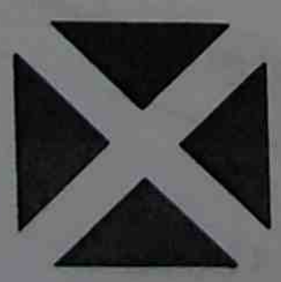	Replace a part with a new one when reassembling.

TABLE OF CONTENTS

GENERAL INSTRUCTIONS	1
PERIODIC MAINTENANCE	2
TROUBLESHOOTING	3
MACHINE TUNING	4
ENGINE DISMOUNTING AND MOUNTING	5
CYLINDER, PISTON AND EXHAUST VALVE	6
CLUTCH	7
KICK STARTER	8
TRANSMISSION AND CRANKSHAFT	9
FUEL SYSTEM	10
COOLING SYSTEM	11
ELECTRICAL SYSTEM	12
FRONT AND REAR WHEELS	13
FRONT AND REAR BRAKES	14
FRONT FORK AND STEERING	15
REAR SUSPENSION	16
SERVICE DATA	17
SPECIAL TOOLS	18
WIRE, CABLE AND HOSE ROUTING	19
SPECIFICATIONS	20

INDEX

ITEM	PAGE
AIR CLEANER	2-4
BEARING INSPECTION, REMOVAL AND INSTALLATION	9-6
BRAKE DISK INSPECTION	14-4
BRAKE FLUID AIR BLEEDING	14-2
BRAKE FLUID REPLACEMENT	14-3
BRAKE PADS REPLACEMENT	14-3
BRAKE PEDAL REMOVAL AND REASSEMBLY	14-11
BRAKES	2-11
BREAK-IN	1-4
CALIPER	14-4
CARBURETOR	10-2
CDI UNIT INSPECTION	12-3
CHOKE/IDLE ADJUST KNOB	1-4
CLUTCH	2-7
CLUTCH PLATE INSPECTION	7-2
CLUTCH PLATE REASSEMBLING	7-3
CLUTCH PLATE REMOVAL	7-2
CONROD INSPECTION	6-5
CRANKCASE REASSEMBLY	9-8
CRANKCASE SEPARATION	9-2
CRANKSHAFT INSPECTION	9-5
CRANKSHAFT INSTALLATION	9-7
CRANKSHAFT REMOVAL	9-3
CYLINDER HEAD INSPECTION	6-3
CYLINDER HEAD REMOVAL	6-2
CYLINDER HEAD, CYLINDER AND PISTON	2-8
CYLINDER INSPECTION	6-3
CYLINDER REASSEMBLING	6-6
CYLINDER REMOVAL	6-2
DISK PLATE REPLACEMENT	13-4
DRIVE CHAIN AND SPROCKETS	2-8
DRIVE CHAIN GUIDE, BUFFER, TENSIONER ROLLER	2-10
ELECTRICAL CIRCUIT	12-2
ENGINE COOLANT	2-5
ENGINE COOLANT REPLACEMENT	11-2
ENGINE DISMOUNTING AND MOUNTING	5-1
ENGINE MOUNTING	5-2
EXHAUST VALVE	2-8
EXHAUST VALVE INSPECTION	6-5
EXHAUST VALVE REASSEMBLING	6-6
EXHAUST VALVE REMOVAL	6-3
FRONT AND REAR WHEEL INSPECTION	13-2
FRONT FORK	2-12
FRONT FORK DISASSEMBLY	15-2
FRONT FORK DISMOUNTING	15-2
FRONT FORK INSPECTION	15-5
FRONT FORK MOUNTING	15-8
FRONT FORK REASSEMBLY	15-5
FRONT WHEEL DISASSEMBLY AND REASSEMBLY	13-2
FUEL	1-2
FUEL HOSE	2-7

ITEM	PAGE
GEARSHIFT LINKAGE INSPECTION	9-3
GEARSHIFT LINKAGE REASSEMBLY	9-9
GEARSHIFT LINKAGE REMOVAL	9-2
IGNITION COIL INSPECTION	12-2
INSPECTION BEFORE PRACTICE	2-1
INSPECTION BEFORE RACE	2-1
KICK STARTER INSPECTION	8-2
KICK STARTER REASSEMBLY	8-3
KICK STARTER REMOVAL	8-2
LOCATION OF PARTS	1-1
LUBRICATION	2-15
MACHINE TUNING, CARBURETOR	4-1
MACHINE TUNING, FRONT FORK	4-7
MACHINE TUNING, REAR SUSPENSION	4-11
MAGNETO ROTOR AND STATOR REMOVAL AND REASSEMBLY	12-4
MASTER CYLINDER	14-8
OIL SEAL INSPECTION, REMOVAL AND INSTALLATION	9-5
OPERATING INSTRUCTIONS	1-3
PERIODIC MAINTENANCE CHART	2-2
PISTON AND PISTON RING INSPECTION	6-4
PISTON REMOVAL	6-2
PISTON RING AND PISTON REASSEMBLING	6-5
PRIMARY DRIVE GEAR	9-2
	9-9
PRIMARY DRIVEN GEAR ASS'Y INSPECTION	7-4
PRIMARY DRIVEN GEAR ASS'Y REASSEMBLY	7-4
PRIMARY DRIVEN GEAR ASS'Y REMOVAL	7-3
RACK AND PINION INSPECTION	7-3
RADIATOR	11-2
RADIATOR CAP INSPECTION	11-2
REAR SHOCK ABSORBER DISASSEMBLY	16-6
REAR SHOCK ABSORBER DISPOSAL	16-3
REAR SHOCK ABSORBER INSPECTION	16-3
REAR SHOCK ABSORBER OIL REPLACEMENT	16-4
REAR SHOCK ABSORBER REASSEMBLY	16-4
REAR SHOCK ABSORBER REMOVAL	16-2
REAR SPROCKET REPLACEMENT	13-4
REAR SUSPENSION	2-12
REAR SUSPENSION LINKAGE	16-11
REAR SUSPENSION LINKAGE REASSEMBLING	16-12
REAR WHEEL REMOVAL AND REASSEMBLY	13-2
REED VALVE	10-3
SERVICE DATA	17-1
SPARK ARRESTER	2-13
SPARK PLUG	2-3
SPECIAL TOOLS	18-1
SPECIFICATIONS	20-1
STATOR COIL INSPECTION	12-4
STEERING	2-14
STEERING BEARING REPLACEMENT	15-9
STEERING INSPECTION	15-9
STEERING REASSEMBLY	15-10

ITEM	PAGE
STEERING REMOVAL	15-9
SWINGARM	16-9
THROTTLE CABLE	2-7
TIGHTENING TORQUE	2-16
TRANSMISSION	1-4
TRANSMISSION INSPECTION	9-4
TRANSMISSION OIL	2-5
TRANSMISSION REASSEMBLY	9-7
TRANSMISSION REMOVAL	9-3
TRIP METER	1-2
TROUBLESHOOTING, ENGINE	3-1
TROUBLESHOOTING, CHASSIS	3-4
WATER PUMP	11-2
WHEEL BEARING REMOVAL AND REASSEMBLY	13-3
WHEELS AND TIRES	2-14
WIRE, CABLE AND HOSE ROUTING	19-1

LOCATION OF PARTS

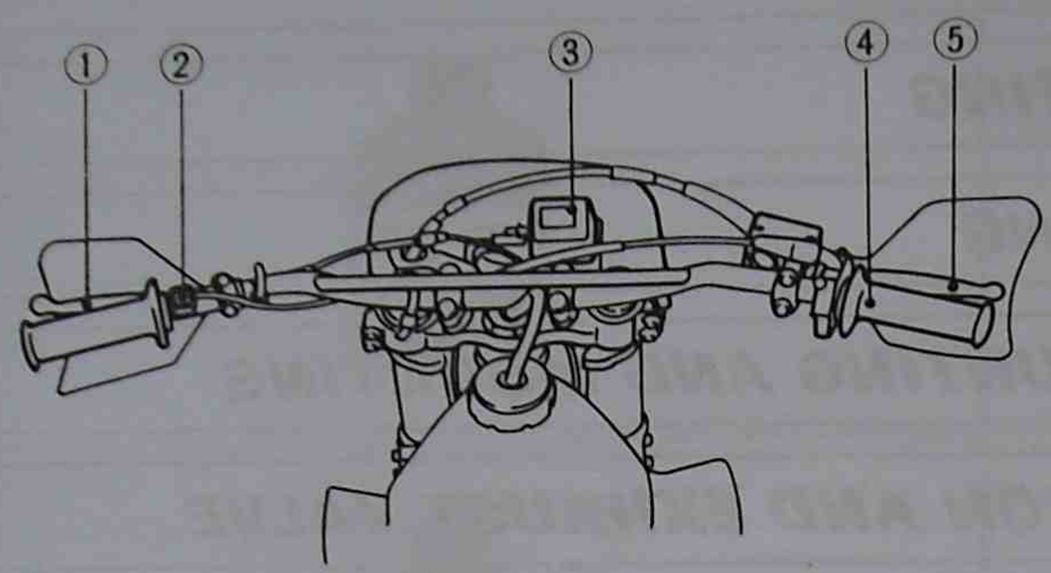

① Clutch lever
② Engine kill switch
③ Trip meter
④ Throttle grip
⑤ Front brake lever

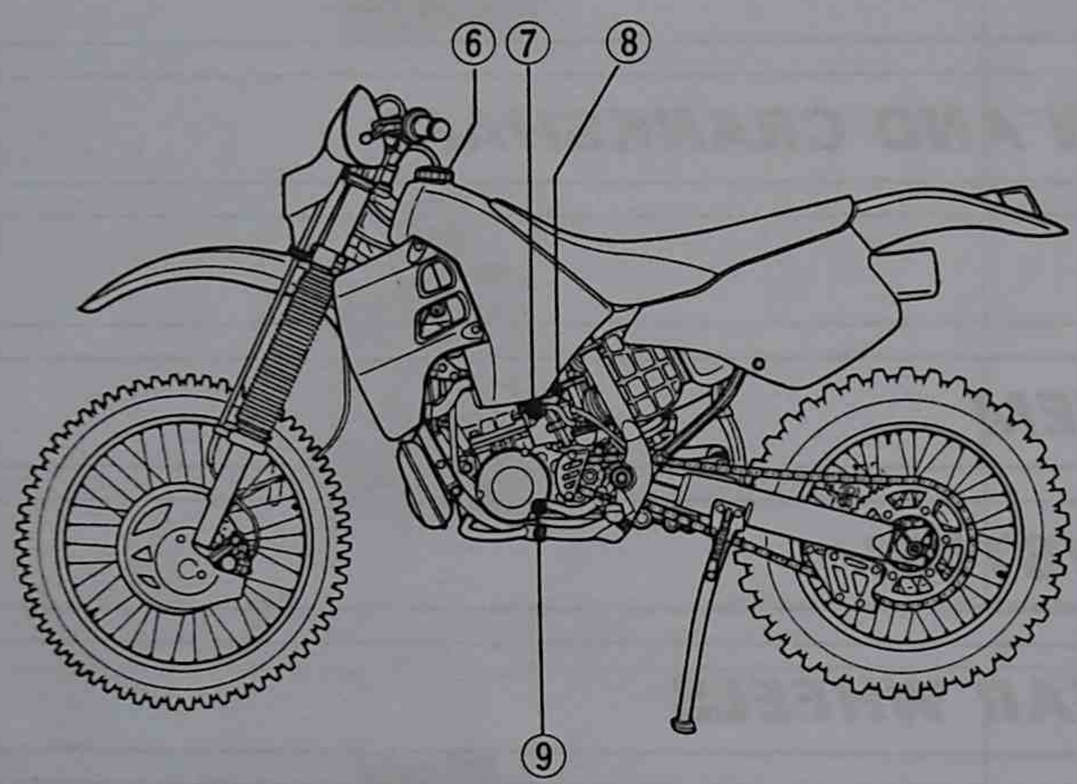

⑥ Fuel tank cap
⑦ Fuel valve
⑧ Carburetor choke knob
⑨ Gearshift lever

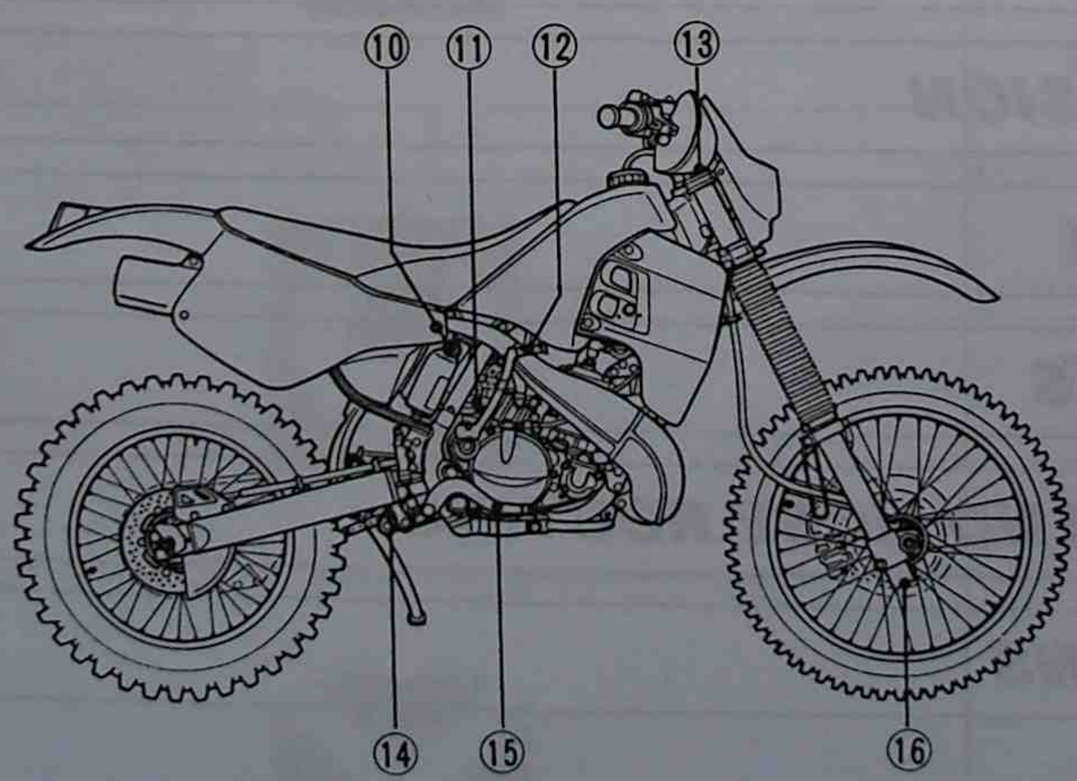

⑩ Rear suspension compression damping adjuster
⑪ Rear brake fluid reservoir
⑫ Kick starter lever
⑬ Front suspension rebound damping adjuster
⑭ Rear suspension rebound damping adjuster
⑮ Rear brake pedal
⑯ Front suspension compression damping adjuster

FUEL

This motorcycle is of the two-stroke design, which requires a premixture of gasoline and oil.

Gasoline: Unleaded gasoline minimun 95 octane (RON)
Engine oil: B.P. RACING 2T-R
SHELL SPORTS SX
MOTUL 800 2T
CASTROL A747
Mixing ratio: 32 : 1
Fuel tank capacity: 11.0 L (2.9 US gal)

⚠ CAUTION

A mixture containing too little oil will cause piston seizure. Too much oil will cause excessive carbon formation resulting in preignition, fouled spark plug and loss of engine power.

Mix fuel and the engine oil at the ratio of 32:1.

Gasoline (L)	Oil (ml)
5.0	156
10.0	312
15.0	468
20.0	624

Gasoline (gal.)	Oil (qt)
1.0	1/8
2.0	1/4
3.0	3/8
4.0	1/2
5.0	5/8

NOTE:

- *Mix gasoline and the engine oil thoroughly when the temperature is below 0°C (32°F). Vegetable-based oils can separate easier than mineral oils.*
- *Use premixture oil as soon as possible after mixing, or lubrication performance of the engine oil can decrease.*
- *Do not mix vegetable-based oil and mineral oil.*
- *Insert the end of the breather hose into the steering stem head after refueling.*

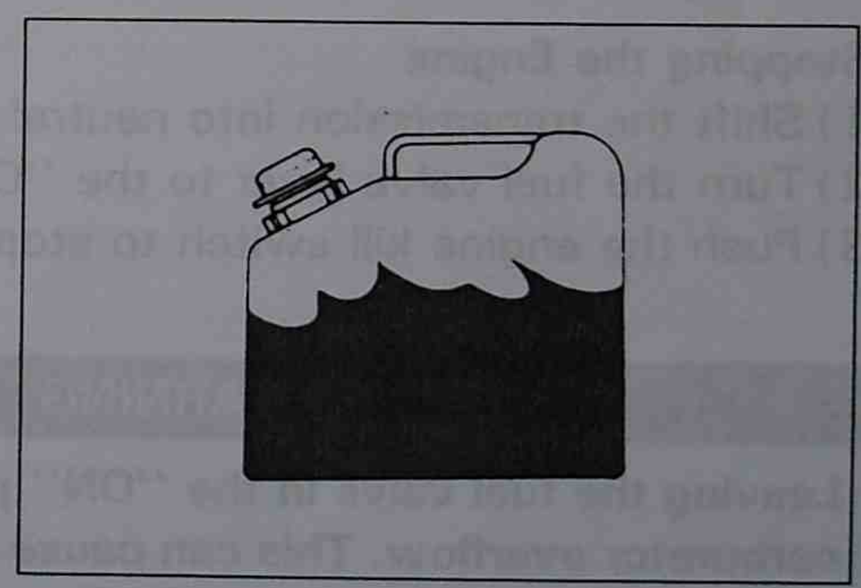

TRIP METER

The trip meter indicates the distance traveled. The mileage as indicated in the meter can be varied for adjustment or for zero reset purpose. To vary the indication pull and turn the knob clockwise or counterclockwise as you desire.

OPERATING INSTRUCTIONS

Starting the Engine

Inspect the transmission oil level, engine coolant level and air cleaner condition before starting the engine.

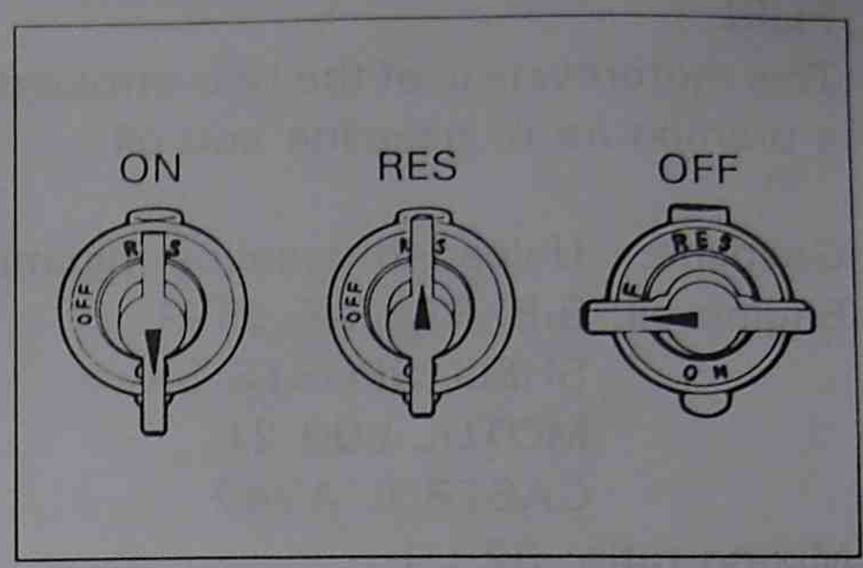

When the engine is cold:

1) Turn the fuel valve lever to the ''ON'' position.
2) Shift the transmission into neutral.
3) Pull the choke knob.
4) Close the throttle grip completely and depress the kick starter lever forcefully.
5) Return the choke knob when the engine revs at steady speed.

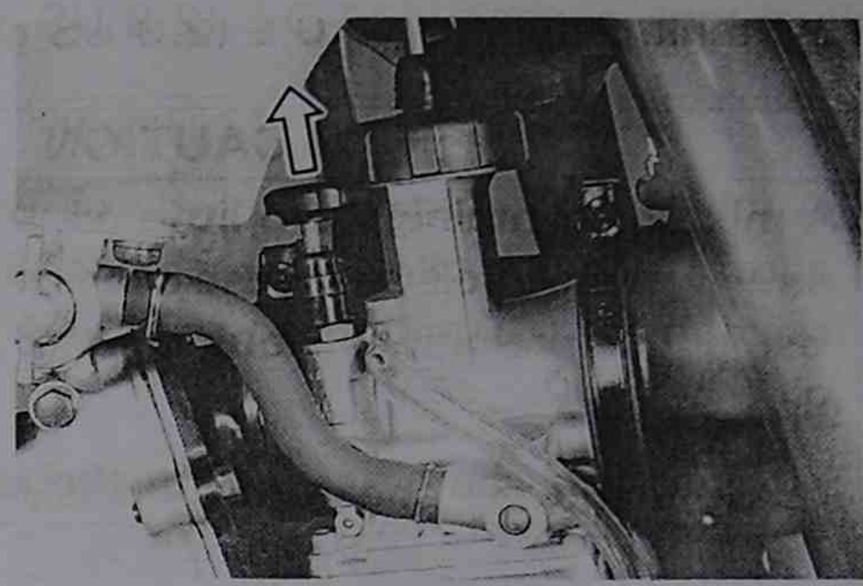

When the engine is warm:

1) Turn the fuel valve lever to the ''ON'' positon.
2) Shift the transmission into neutral.
3) Open the throttle 1/8—1/4 turn and depress the kick starter lever forcefully.

To restart after the motorcycle has fallen:

1) Shift the transmission into neutral.
2) Open the throttle completely and depress the kick starter lever forcefully.
3) Close the throttle gradually as engine speed increases.
4) Wait until engine revs smoothly.

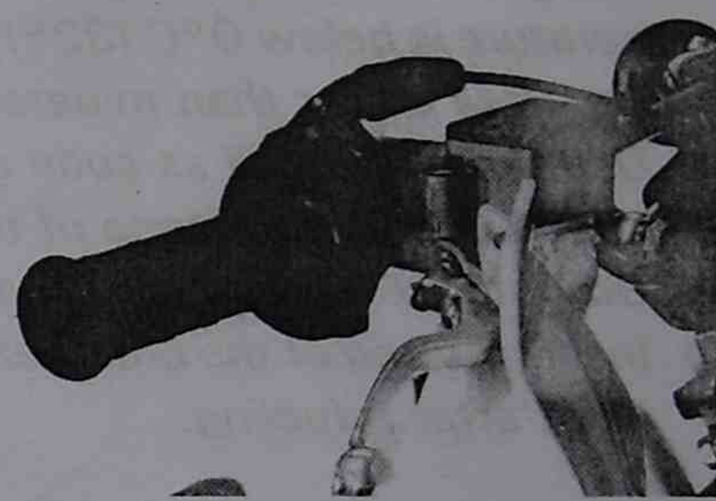

Stopping the Engine

1) Shift the transmission into neutral.
2) Turn the fuel valve lever to the ''OFF'' position.
3) Push the engine kill switch to stop the engine.

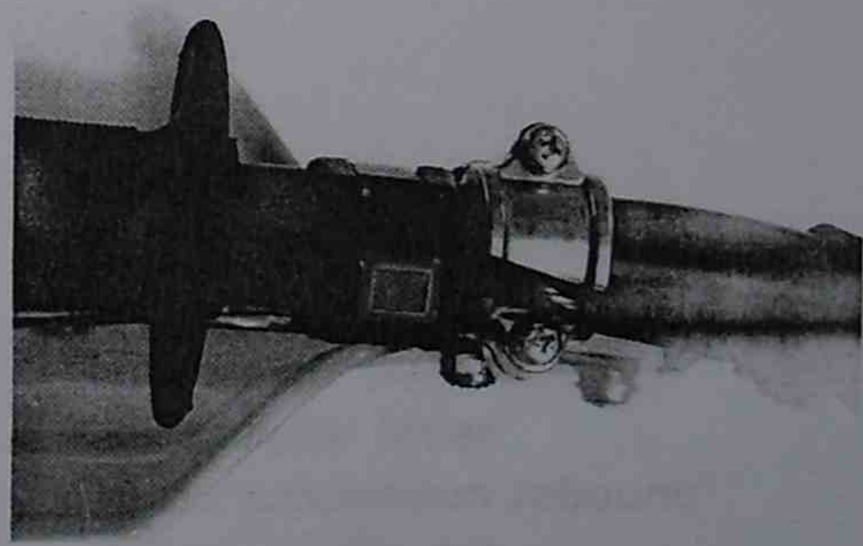

⚠ WARNING

Leaving the fuel valve in the ''ON'' position may cause carburetor overflow. This can cause a fire or severe engine damage when you start the engine.

Always leave the fuel valve in the ''OFF'' position when the engine is not running.

CHOKE/IDLE ADJUST KNOB

The choke/idle adjust knob is used to work the choke system and to adjust the engine idle speed. The choke system works by pulling up the knob. The engine idle speed is adjusted by turning the knob. Turn the knob clockwise to decrease engine idle speed and turn the knob counterclockwise to increase engine idle speed.

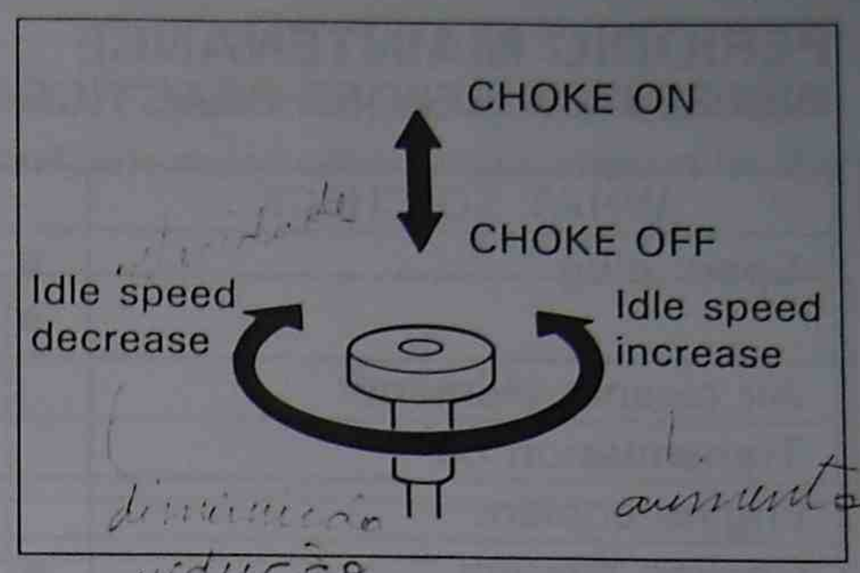

TRANSMISSION

This motorcycle has a 5-speed transmission. Neutral is located between low and 2nd. Engage first gear by pressing the lever down from the neutral position. You can shift into higher gears by lifting on the shift lever once for each gear. When neutral is desired, press or lift the lever to a position halfway between low and 2nd gear.

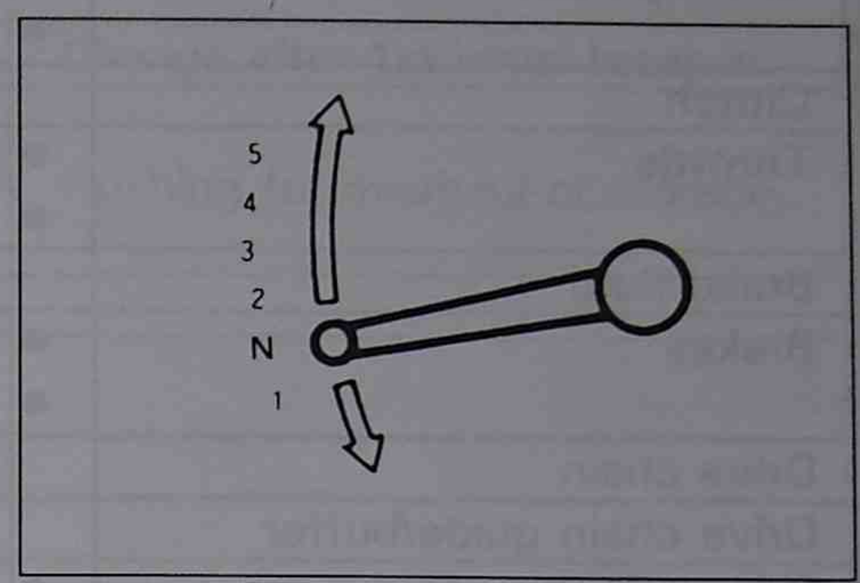

BREAK-IN (RUNNING-IN)

When the Motorcycle Is New

1) Warm up the engine before starting off.
2) Ride for 10 minutes using less than 1/2 throttle opening with various throttle opening.
3) Ride for 20 minutes using less than 3/4 throttle opening with various throttle opening.

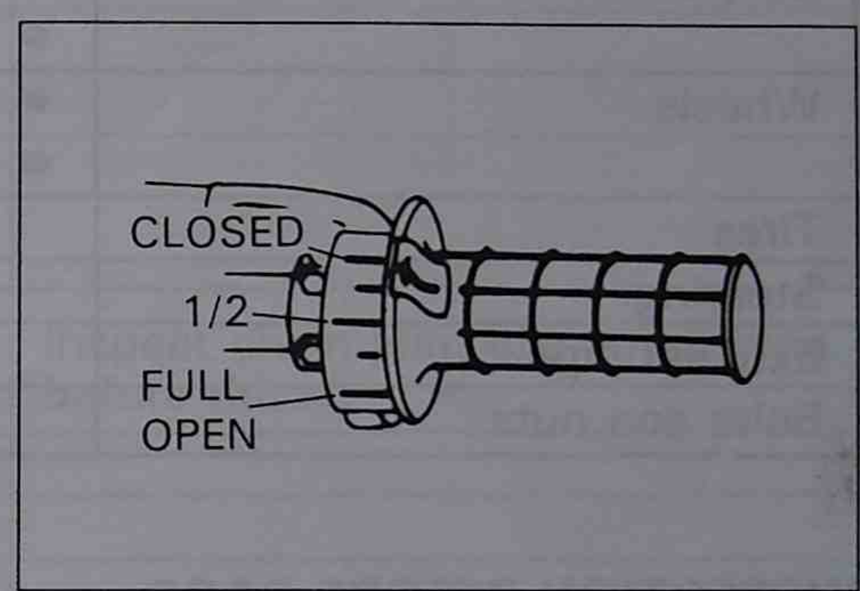

NOTE:

- *The break-in period is the period of greatest wear.*
- *The bolts and nuts of the new machine can loosen quickly. Be sure to retighten the bolts and nuts during the break-in period.*

When Engine Parts Are Replaced

Follow the same procedure when any of the following parts are replaced:

Piston
Piston ring
Cylinder
Crankshaft
Crankshaft bearing

PERIODIC MAINTENANCE

INSPECTION BEFORE PRACTICE

WHAT TO CHECK	CHECK FOR
Spark plug	• Heat range, fouled electrode, tightness • Loose high-tension cord
Air cleaner element	Lubrication
Transmission oil	Oil level
Engine coolant	Engine coolant level
Cooling system	• Radiator hose damage • Engine coolant leak
Clutch	Smooth operation
Throttle	• Play • Smooth operation
Brake fluid	Fluid level
Brakes	• Brake lever/pedal play • Operation
Drive chain	Slack, lubrication, chain joint clip condition
Drive chain guide/buffer	Wear, damage
Suspension	• Smooth operation • Front fork air pressure
Wheels	• Spoke tension • Rim lock tightness
Tires	Tire pressure
Steering	Smoothness, play
Exhaust pipe	Firm fixation
Bolts and nuts	Tightening torque

INSPECTION BEFORE RACE

WHAT TO CHECK	CHECK FOR
All items of inspection before practice above plus.	
Air cleaner	Cleanliness
Clutch	Clutch disc plates wear and distortion
Brake pads	Wear
Sprockets	Wear
Fuel tank	• Leakage • Fuel filter clogging
Fuel hose	Damage
Exhaust pipe	Damage
Piston and Cylinder	• Combustion chamber carbon deposit • Piston head carbon deposit • Piston and cylinder wear
Front fork	Air pressure

PERIODIC MAINTENANCE CHART

It is very important to inspect and maintain the machine regularly. Follow the guideline in the chart. The life of parts varies depending on the riding conditions. Perform more often than shown in the chart if you use the motorcycle under severe conditions.

Interval / Service Item	HRS	Every 1 HRS	Every 5 HRS	Every 30 HRS	Every 60 HRS	Remarks
Spark plug		—	—	—	R	
Air cleaner		I	C	C	C	
Transmission oil		—	—	—	R	Change after 1st initial break-in.
Cooling-system		I & C	I & C	I & C	I & C	Flushing for overhaul or storage.
		Replace radiator hose and engine coolant every year.				
Clutch		I	I	I	I	
Throttle and clutch cable		I	I	I	R	
Carburetor		I	I	I	I	
Fuel hose		I	I	I	I	
		Replace every four years.				
Piston		—	—	—	I	
Piston ring		—	—	—	I	
Cylinder head, cylinder, exhaust valve and muffler		—	—	—	I	
Drive chain		—	—	—	I	Inspect chain joint clip every time before riding.
		Clean and lubricate after every race.				
Engine sprocket		—	—	—	I	
Rear sprocket		—	—	—	I	
Drive chain buffer		—	—	I	—	
Drive chain guide		—	—	I	—	
Brake		I	I	I	I	Replace brake hose and fluid every year.
Front fork oil		—	—	R	—	Change after 1st initial break-in.
Front fork		I	I	I	I	Check front fork inner tube frequently for abnormality.
Rear suspension system pivoting portion		I	I	I	I	Check rear suspension system frequently and apply the grease to the pivoting portion as necessary.
Spark arrester		—	—	I	I	
Tire		I	I	I	I	
Spoke nipple		Inspect every 20 min. up to initial two hours then check before each ride.				First loosen then tighten.
Steering		I	I	I	I	
Bolts and nuts		T	T	T	T	Retighten every one hour.

NOTE: R=Replace, C=Clean, T=Tighten, I=Inspect and clean, adjust lubricate or replace if necessary.

NOTE: If your motorcycle is used under high stress conditions such as frequent full throttle operation, or is frequently operated in a dusty area, maintenance should be performed more often than indicated in the chart. If you have any questions regarding appropriate maintenance intervals, consult your authorized Suzuki dealer.

SPARK PLUG

Inspect the spark plug condition, electrode color, carbon deposits, spark plug gap, and washer damage, after removing the spark plug.

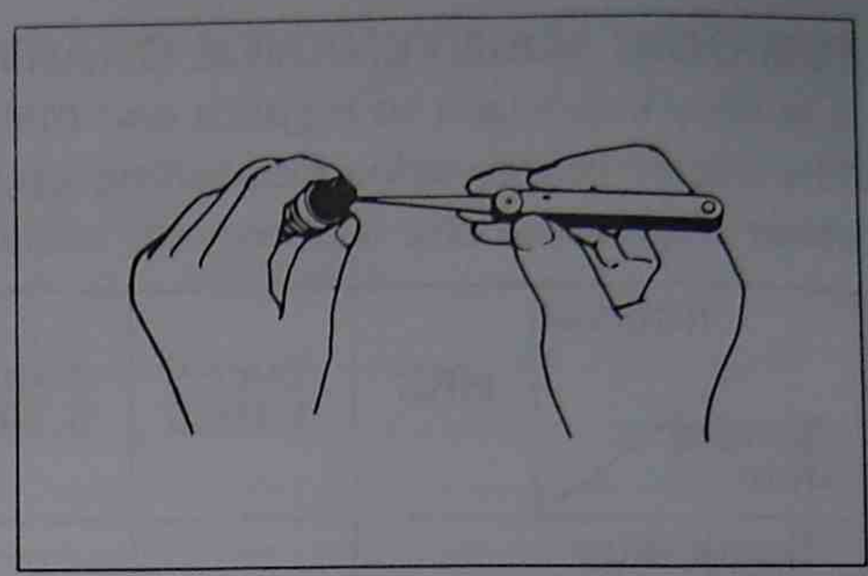

NOTE: Remove the dirt around the spark plug before removing the spark plug to prevent dirt from entering the combustion chamber.

Inspect the porcelain tip color.

Porcelain tip color	Cause
White (overheated)	• Hot type spark plug • Advanced ignition timing • Lean air/fuel mixture • Deteriorated fuel
Black (fouled)	• Cold type spark plug • Retarded ignition timing • Rich air/fuel mixture • Rich oil/gasoline mixture

Clean the spark plug with a brush or wire and check the spark plug gap with a thickness gauge.

Spark plug gap: 0.5–0.6 mm (0.020–0.024 in)

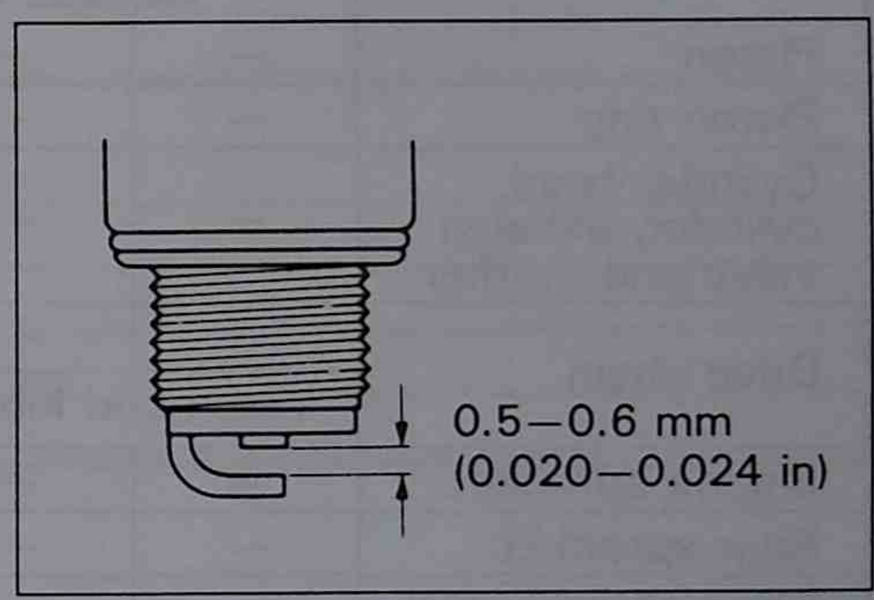

Standard Spark plug

NGK	BR9EV

⚠ CAUTION

Changing the spark plug heat range improperly can damage the engine.

Select the spark plug heat range only after adjusting the ignition timing, carburetor setting and oil/gasoline mixture.

Tighten the spark plug with specified tightening torque after tightening the spark plug temporarily with fingers.

Spark plug: 28 N·m (2.8 kg-m, 20.0 lb-ft)

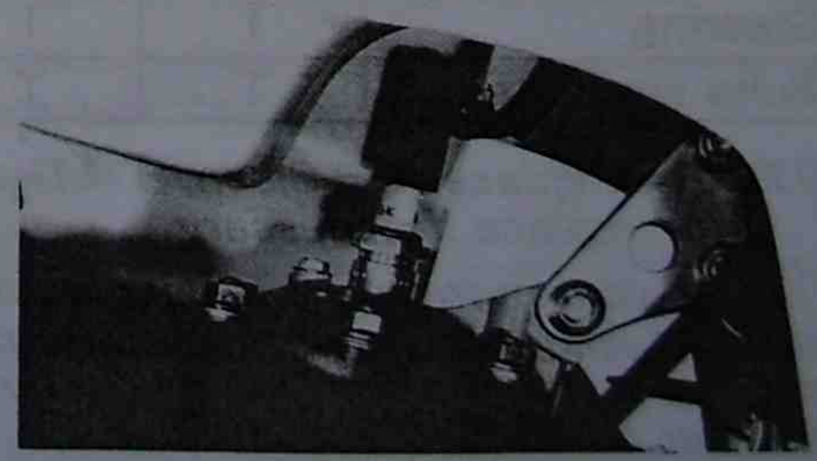

AIR CLEANER

Air Cleaner Element Removal

- Remove the seat.
- Remove the air cleaner cover.
- Remove screw ①.

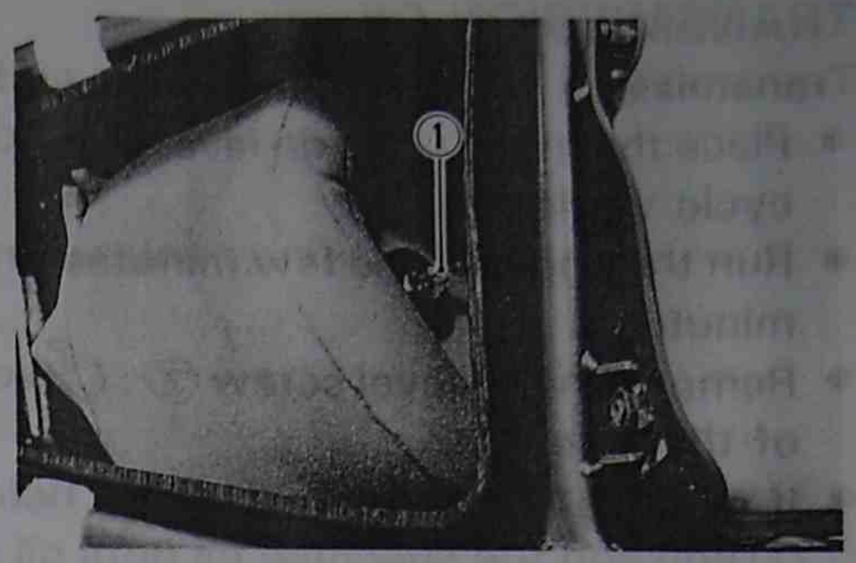

- Remove outer element ② and inner element ③ from the element holder.

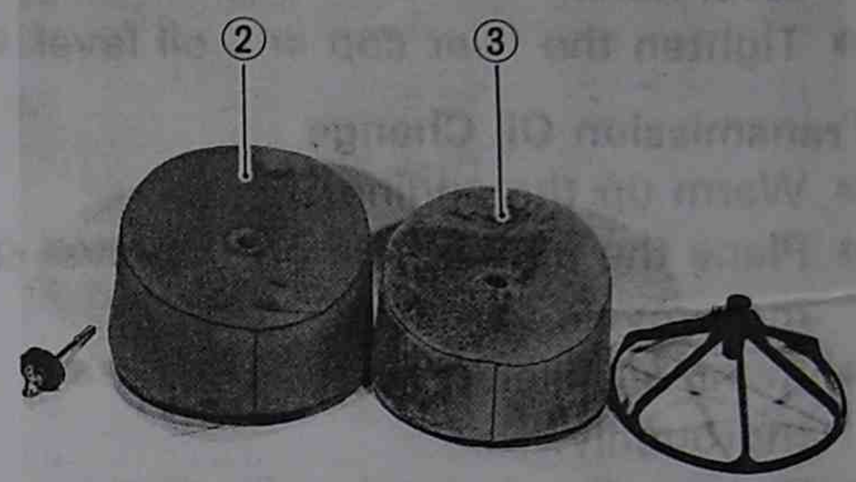

Washing

- Fill a washing pan large enough to hold the element with a non-flammable cleaning solvent Ⓐ. Immerse the element in the solvent and wash it.
- Squeeze the element by grasping it to remove excess solvent. Do not twist or wring the element or it will develop cracks.
- Dry the element in a plastic bag, pour in some foam filter oil Ⓑ and work the oil into the element.
- Squeeze the element to remove excess oil.

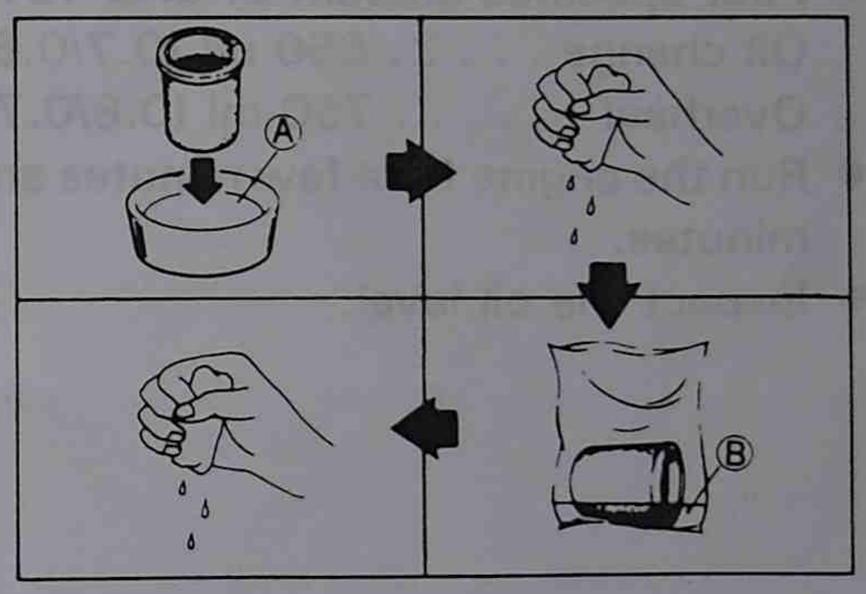

NOTE: Both inner and outer elements should be cleaned in the same manner.

Installation

- Apply grease to the element holder where it contacts the element.
- Install the inner and outer elements onto the element holder so triangle mark ④ faces upward.

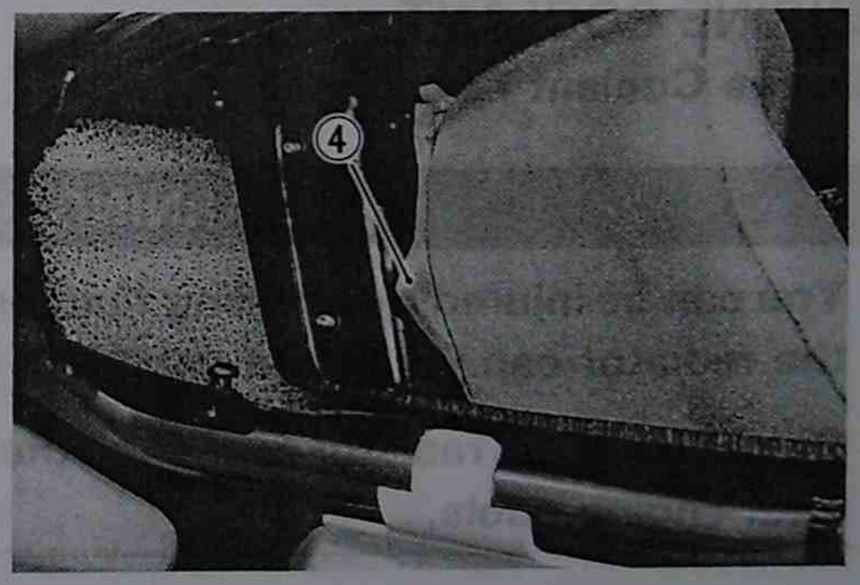

⚠ CAUTION

Improper element installation allows dust and dirt to enter into the combustion chamber. It can result in piston and cylinder wear.

Be sure to check the element seals properly after installing the elements.

TRANSMISSION OIL

Transmission Oil Level Inspection and Replenishment

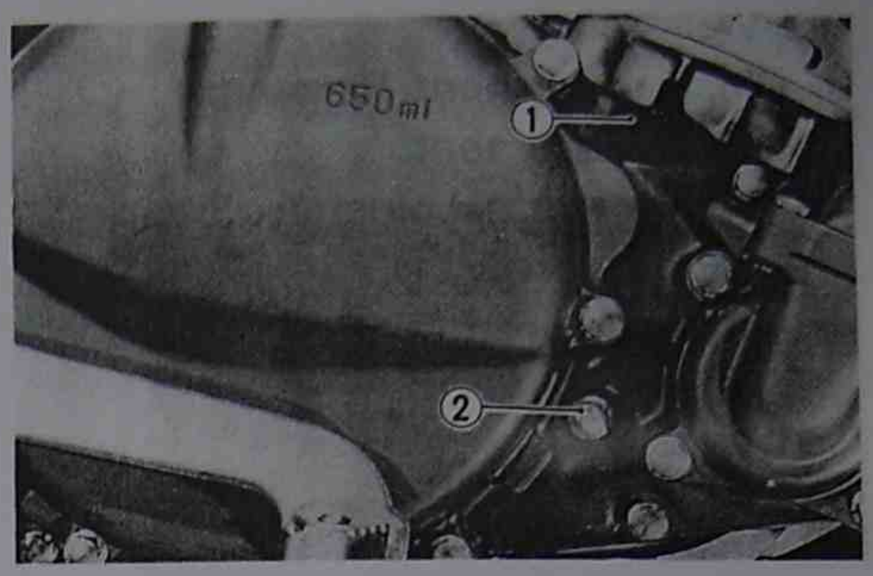

- Place the motorcycle on level ground and hold the motorcycle vertically.
- Run the engine for a few minutes and stop it. Wait 2—3 minutes.
- Remove the oil level screw ②. Check that oil comes out of the hole.
- If oil does not come out of the hole, open oil filler cap ① and add the specified oil until oil comes out of the oil level hole.
- Tighten the filler cap and oil level screw firmly.

Transmission Oil Change

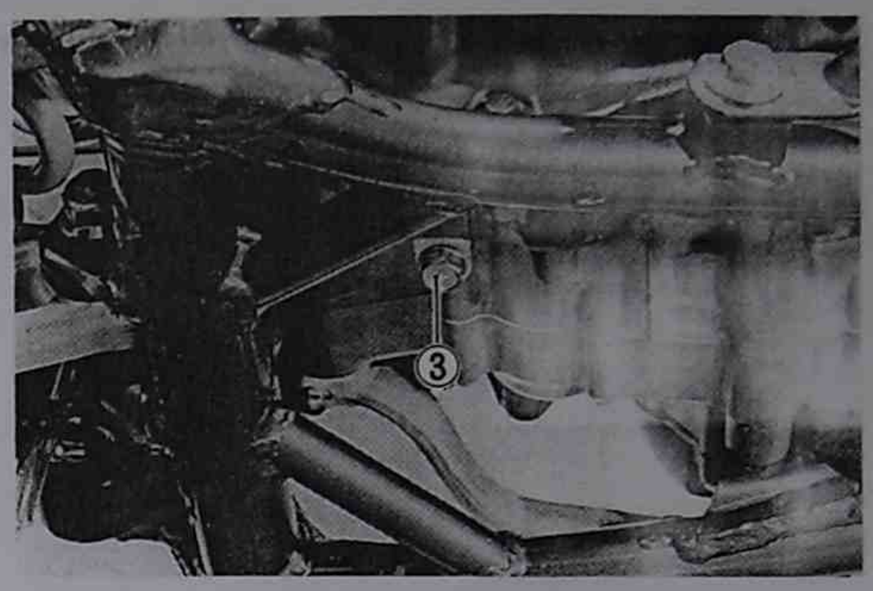

- Warm up the engine.
- Place the motorcycle on the level ground and hold the motorcycle vertically.
- Remove filler cap ① and drain plug ③. Drain oil thoroughly.
- Tighten the drain plug firmly.
- Pour specified amount of SAE 10W-40 motor oil.
  Oil change . . . . . 650 ml (0.7/0.6 US/Imp qt)
  Overhaul . . . . . 750 ml (0.8/0.7 US/Imp qt)
- Run the engine for a few minutes and stop it. Wait 2—3 minutes.
- Inspect the oil level.

ENGINE COOLANT

Engine Coolant Level Check

⚠ WARNING

You can be injured by scalding fluid or steam if you open the radiator cap when the engine is hot.

Do not open the radiator cap when the engine is hot. Wait until engine cools.

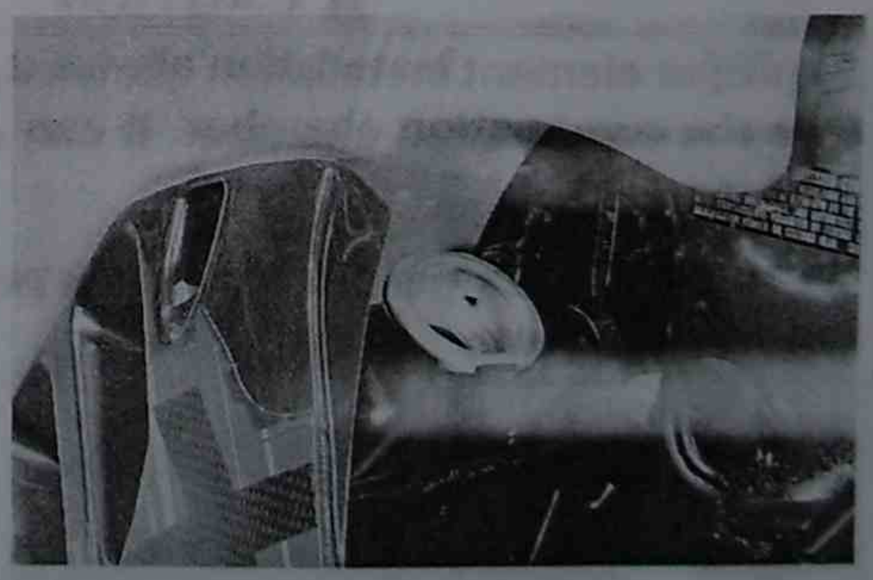

- Remove the radiator cap.
- Check that the engine coolant level is at the bottom of the inlet hole. If not, replenish the radiator with specified coolant.
- Tighten the radiator cap securely.

⚠ CAUTION

Improperly tightening the radiator cap will prevent the cooling system from reaching the specified operating pressure and will cause coolant overflow.

Tighten the radiator cap until it locks firmly.

NOTE:

- *This motorcycle does not have an overflow tank at the end of breather hose. Therefore, engine coolant level may decrease while riding. Check the coolant level every time before riding.*
- *When replenishing engine coolant, be sure to use the coolant mixed with distilled water at the ratio of 50 : 50. Adding only water will dilute the coolant and it may decrease cooling performance.*

Engine Coolant

Use an anti-freeze and Summer coolant which is compatible with aluminum radiator, mixed with distilled water at the ratio of 50 : 50.

NOTE: The radiator, cylinder and cylinder head are made of aluminum alloy. Using non-recommended engine coolant may corrode aluminum alloy and may clog the coolant passageways.

⚠ WARNING

Engine coolant is harmful if swallowed or if it comes in contact with your skin or eyes.

Keep engine coolant away from children and pets. Call your doctor immediately if the coolant is swallowed and induce vomiting. Flush eyes or skin with water if the coolant gets in eyes or comes in contact with skin.

Cooling System Inspection

Inspect the following items before practice and races.

- Engine coolant leakage
- Radiator hose cracks and deterioration
- Radiator mounting condition
- Radiator breather hose condition
- Radiator fin condition

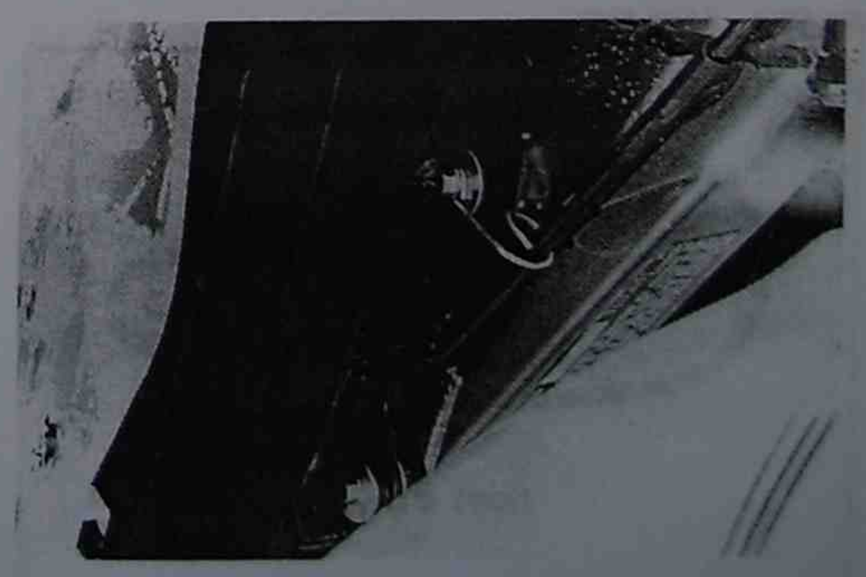

CLUTCH

Adjust the clutch cable play as follows:

Major Adjustment

- Loosen lock nut ①.
- Turn adjuster ② so the clutch cable has 10—15 mm (0.4—0.6 in) play at the clutch lever end before pressure is felt.
- Tighten lock nut ① .

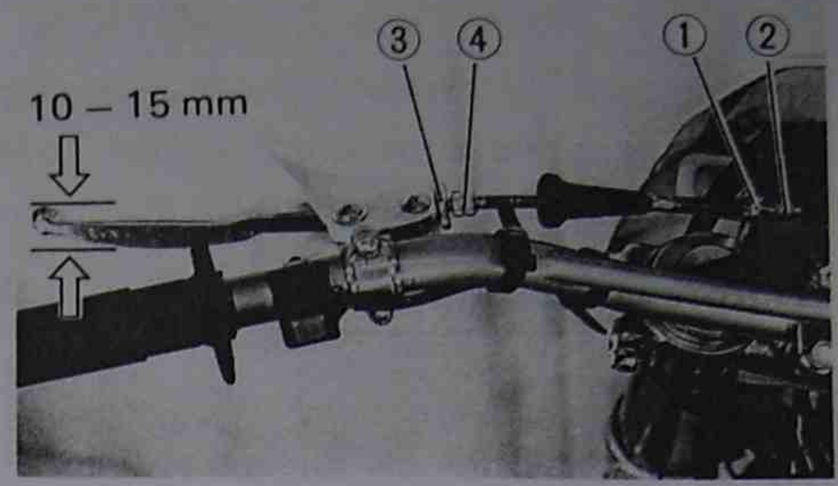

Minor Adjustment

- Loosen lock nut ③.
- Turn adjuster ④ so the clutch cable has 10—15 mm (0.4—0.6 in) play at the clutch lever end before pressure is felt.
- Tighten lock nut ③.

THROTTLE CABLE

Measure the throttle cable play by turning the throttle grip. The throttle grip should have 2.0—4.0 mm (0.08—0.16 in) play.

Adjust the throttle cable play as follows:

- Loosen lock nut ①.
- Turn adjuster ② so the throttle cable has correct play.
- Tighten lock nut ①.

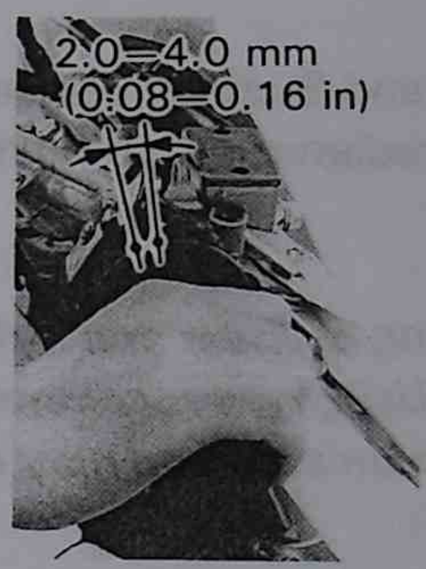

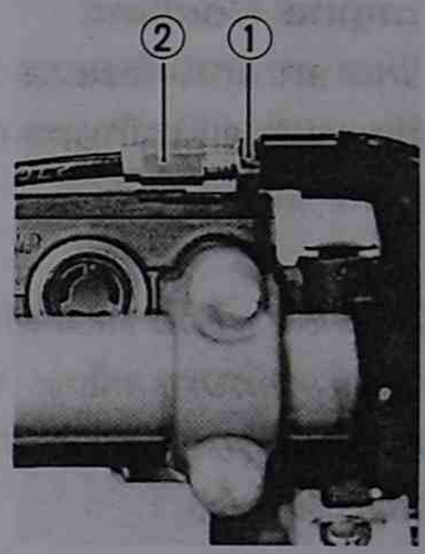

- Remove the throttle housing cover.
- Apply oil to the throttle cable.
- Apply grease to the throttle cable spool.

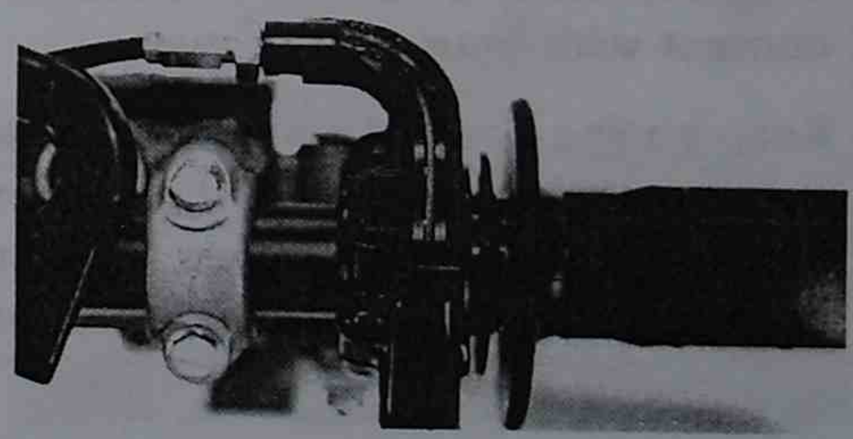

FUEL HOSE

Replace fuel hose every four years.

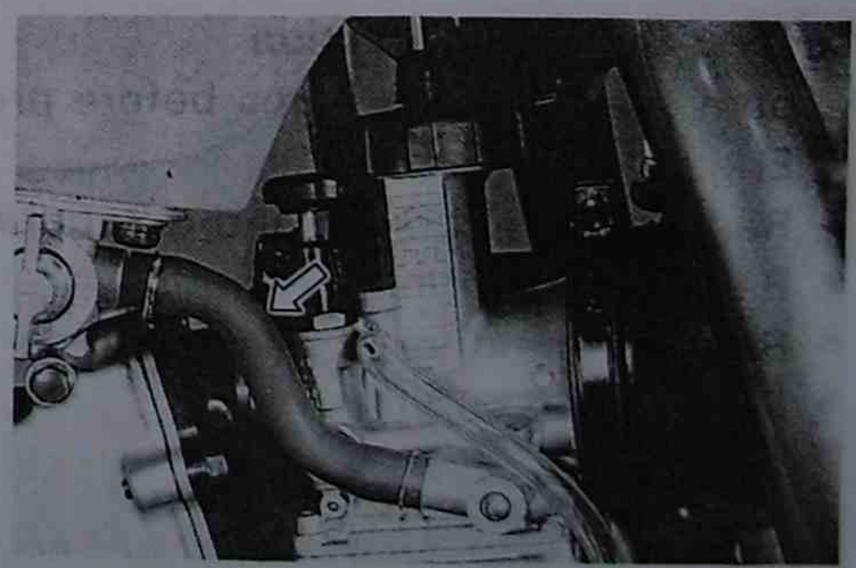

CYLINDER HEAD, CYLINDER AND PISTON

Cylinder Head

- Remove the cylinder head. (☞ 6-2)
- Remove carbon deposits from combustion chamber surface.
- Inspect for pinholes, cracks and other damage.

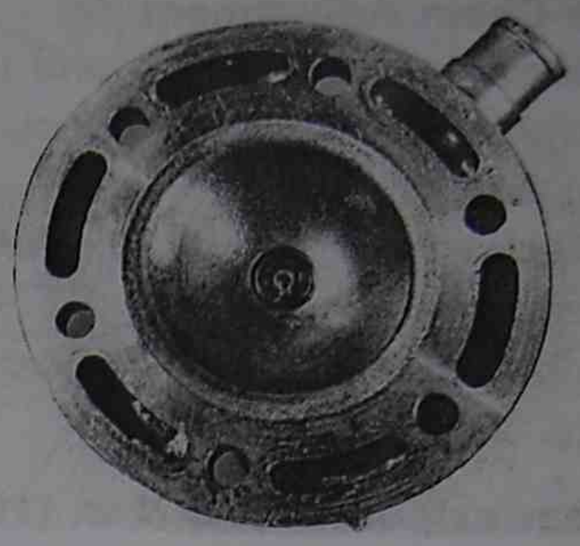

Cylinder

- Remove the cylinder. (☞ 6-2)
- Remove carbon deposits from the exhaust port and the exhaust valve chamber.
- Check for scratches and wear on the cylinder sleeve.

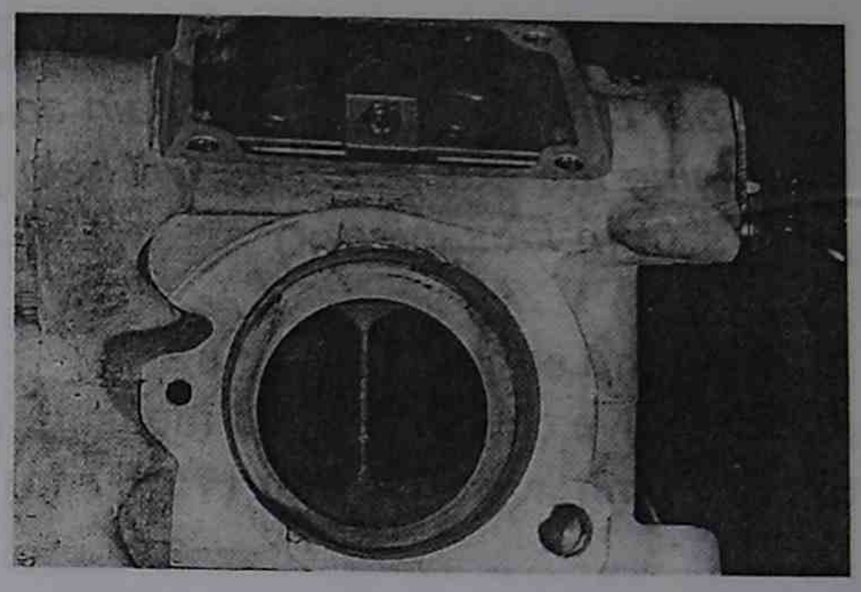

Piston

- Remove the piston. (☞ 6-2)
- Remove carbon deposits from the top surface of the piston.
- Check for scratches, cracks, and wear around the piston bosses.
- Remove minor scuffs with #1000 – #1200 sand paper.
- Check piston ring wear. Remove carbon deposits from the piston ring groove.

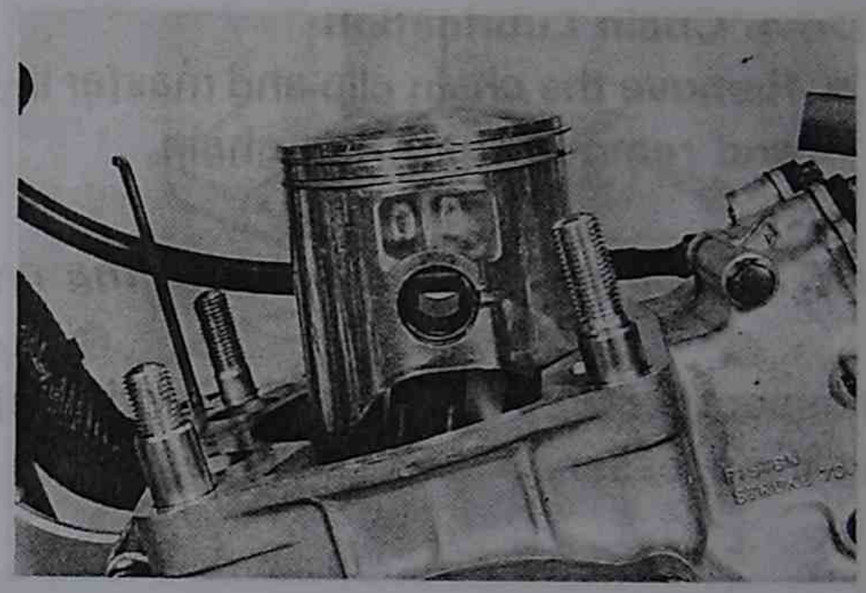

EXHAUST VALVE

- Remove the exhaust valve. (☞ 6-3)
- Remove carbon deposits from the exhaust valve and exhaust valve guide.
- Check for wear and damage.

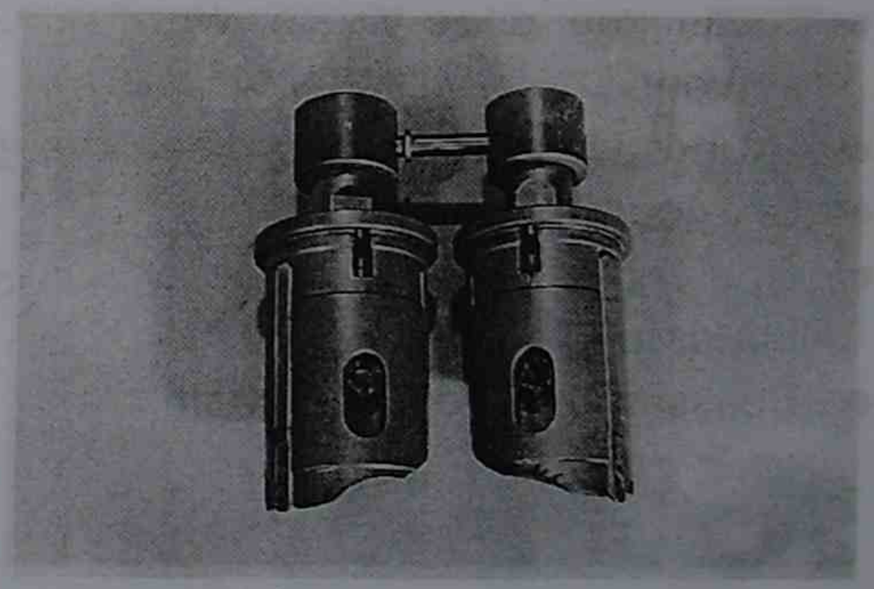

DRIVE CHAIN AND SPROCKETS

Drive Chain Slack

- Place the motorcycle on the side stand.
- Inspect the drive chain slack at the middle point between the two sprockets.

Drive chain slack: 55 – 65 mm (2.2 – 2.6 in)

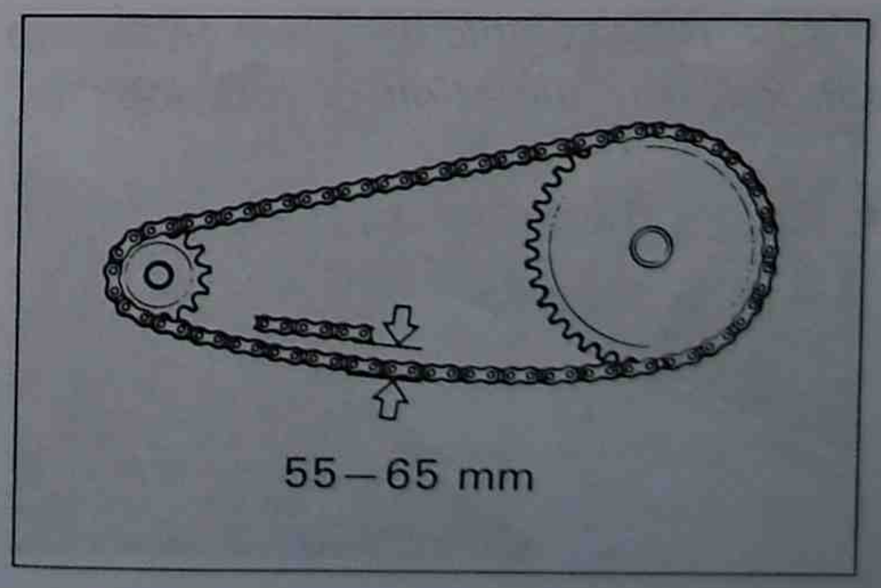

Drive Chain Adjustment

- Remove cotter pin ① and loosen axle nut ②.
- Adjust the drive chain slack to the specification by turning adjuter ③ .
- Check that both right and left alignment mark are at the same position.
- Tighten the axle nut. Replace the cotter pin with a new one.

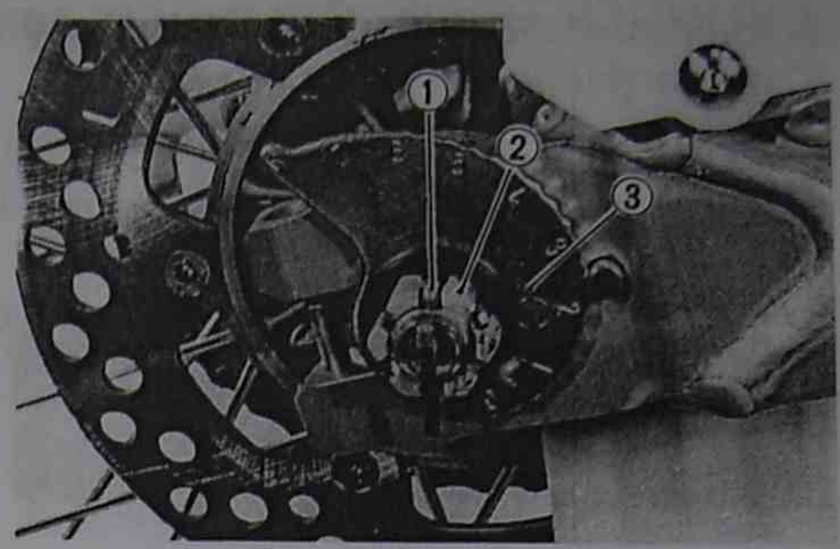

Rear axle nut: 100 N·m (10.0 kg-m, 72.5 lb-ft)

NOTE: Pull the upper drive chain tight and lock it by placing a bar between the drive chain and rear sprocket while tightening the axle nut. This will help prevent the chain adjusters from loosening.

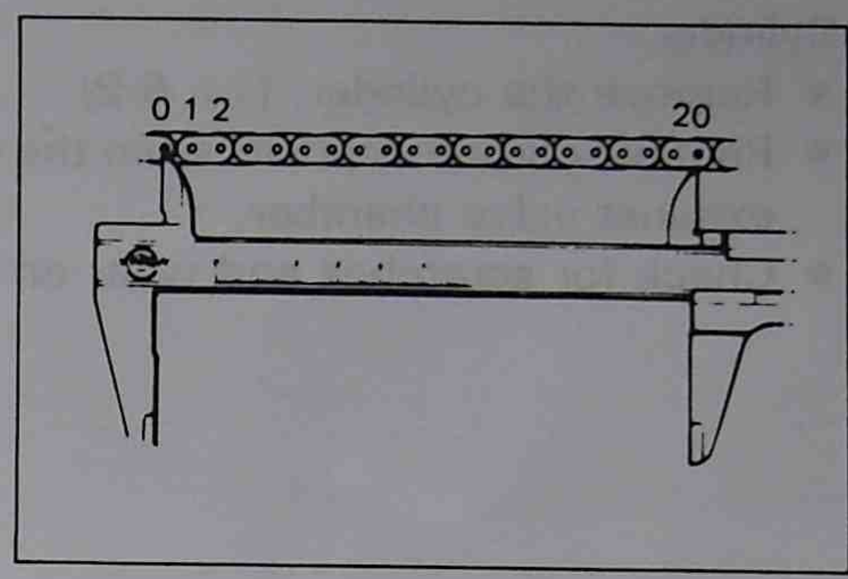

20th Pitch Length

Pull the drive chain tight and measure the 20th pitch length.

Service limit: 319.4 mm (12.57 in)

Drive Chain Lubrication

- Remove the chain clip and master link from the drive chain and remove the drive chain.

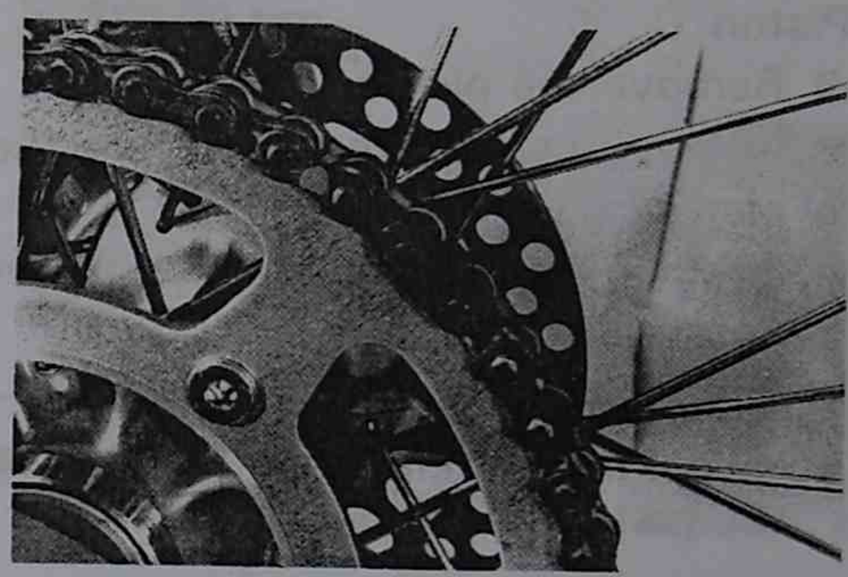

NOTE: Be careful not to bend the chain clip.

Inspect for wear and damage of the drive chain and replace it if necessary.

- Clean the drive chain with non-flammable cleaning solvent.
- Do not use gasoline to clean the drive chain.
- Dry the drive chain.
- Apply Suzuki Chain Lube or an equivalent to the link plates and rollers.
- Reassemble the drive chain.

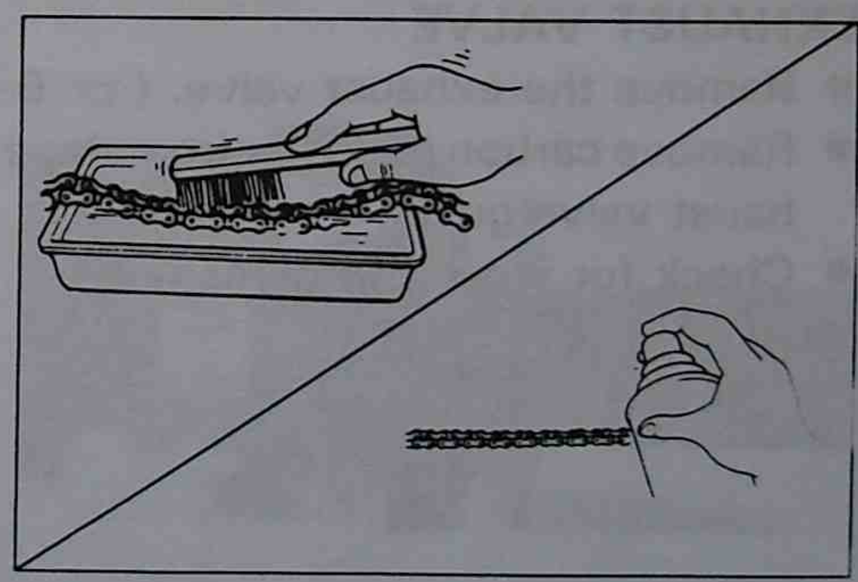

NOTE: Reassemble the drive chain clip so the slit end faces opposite the direction of rotation.

- Adjust the drive chain slack.

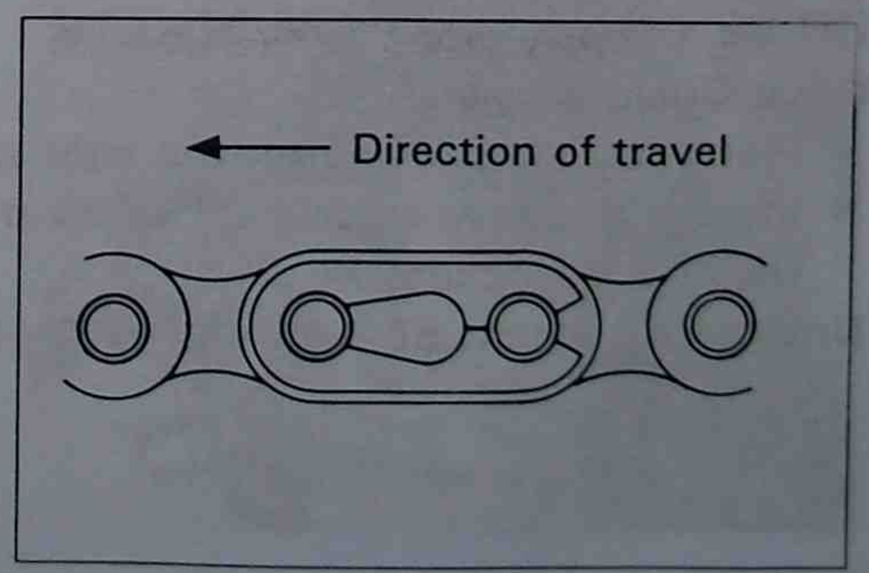

Sprocket Inspection

Inspect the engine sprocket and rear sprocket for wear and cracks. Replace the sprockets as necessary.

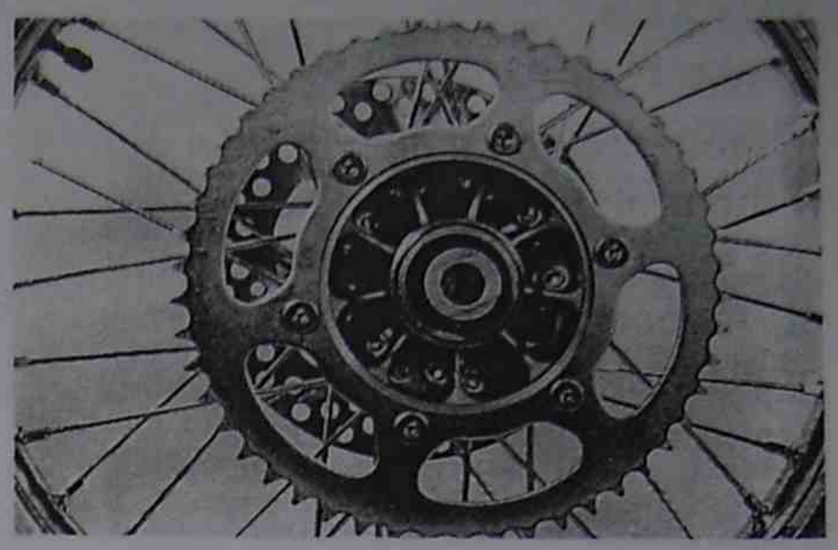

NOTE: If the sprocket teeth are worn as shown, replace the sprckets and drive chain as a set.

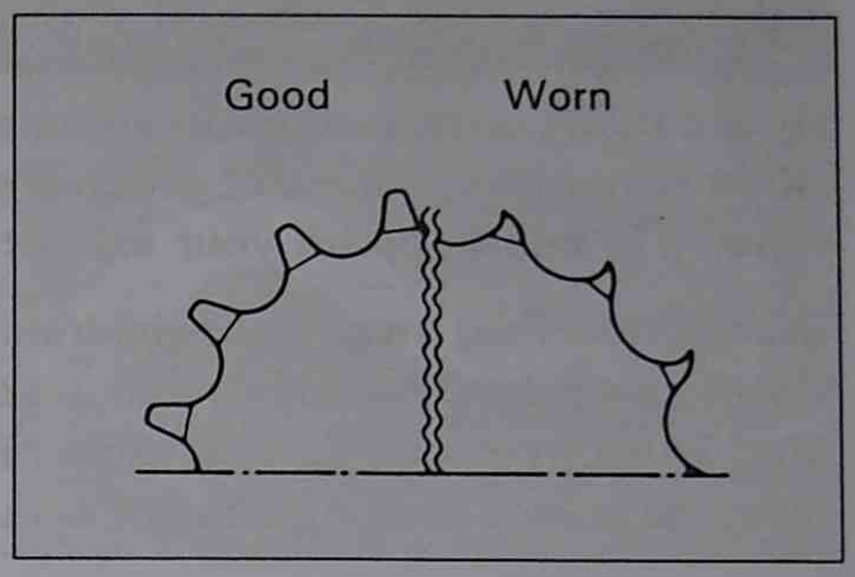

DRIVE CHAIN GUIDE, BUFFER, TENSIONER ROLLER

Drive Chain Guide

Inspect the drive chain guide ① for bends and damage.

NOTE: The drive chain can hit a bent guide causing noise and drive chain wear.

Inspect the chain guide defense ② for wear.

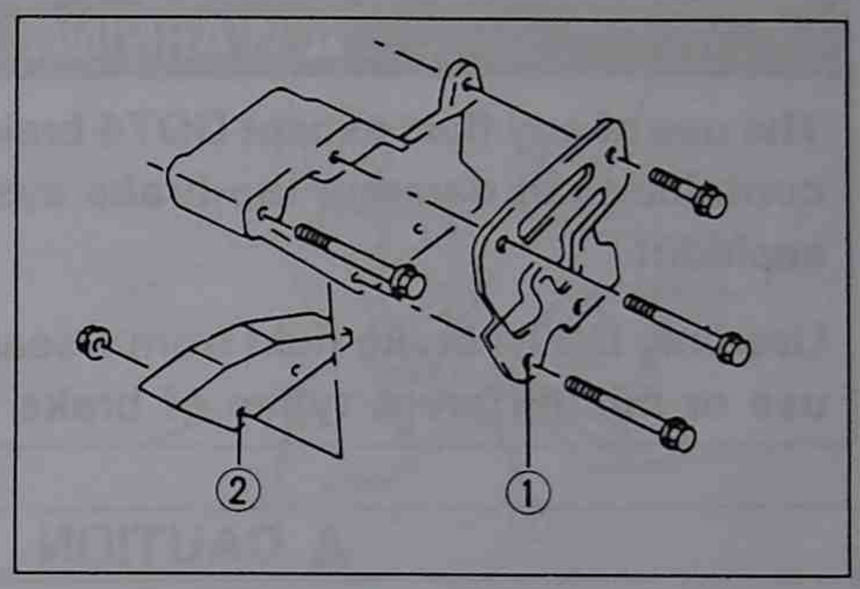

Drive Chain Guide Buffer

Inspect the drive chain guide buffer ③ for wear and cracks.

NOTE: The drive chain can touch the swingarm directly if the chain guide buffer is worn out. This will cause drive chain and swingarm damage.

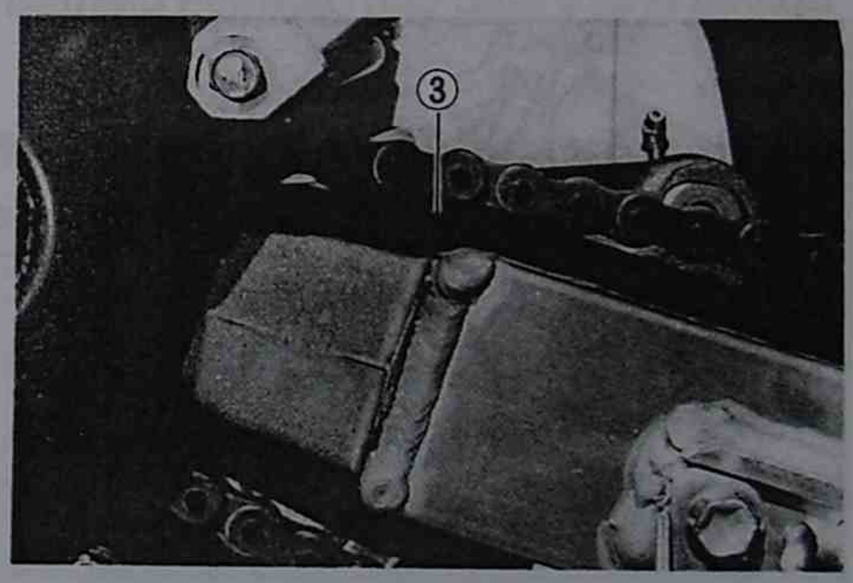

Drive Chain Tensioner Roller

- Inspect the drive chain tensioner rollers ④ for wear.
- Inspect the tensioner roller bolts for tightness.

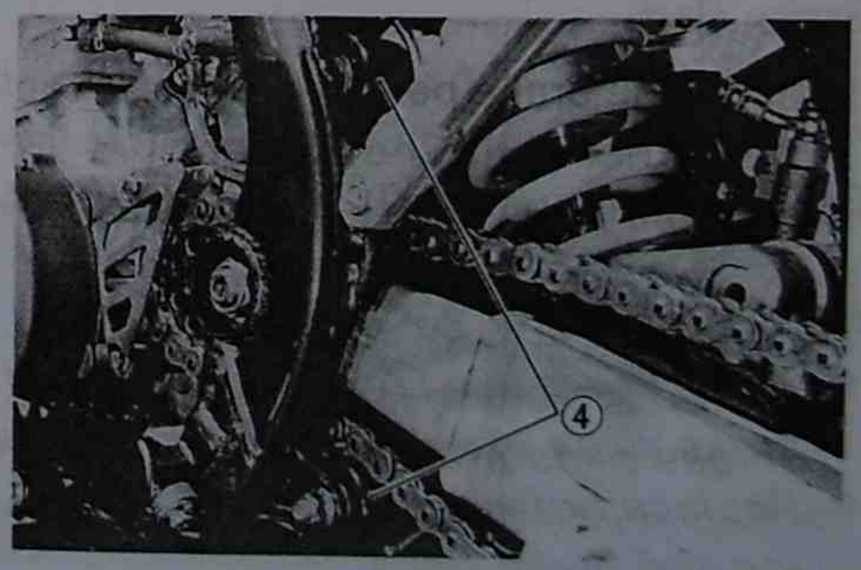

BRAKES

Brake Fluid Level

Inspect the brake fluid level in both front and rear reservoirs. If the brake fluid level is lower than LOWER mark, replenish the reservoir with the specified brake fluid to the UPPER level. Inspect brake pad wear and brake fluid leakage if the brake fluid level decreases.

Brake fluid: DOT4

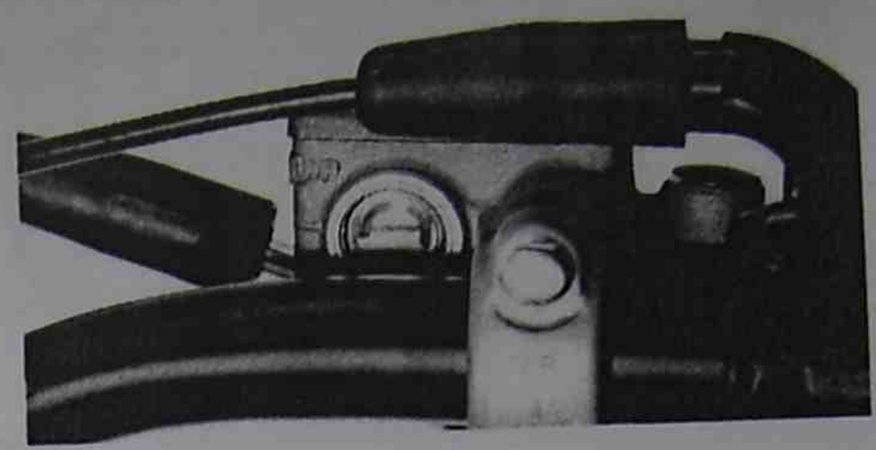

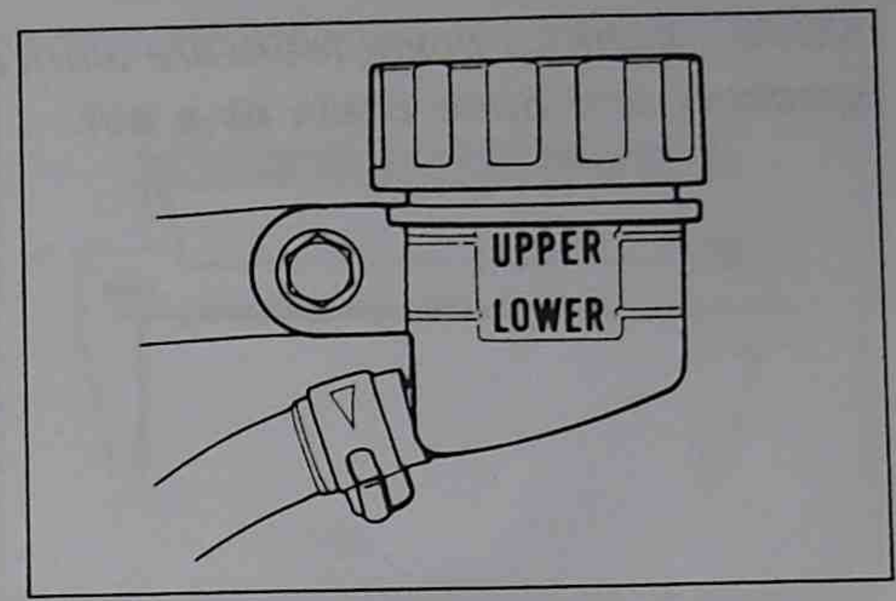

⚠ WARNING

Brake fluid can be hazardous to humans and pets. Brake fluid is harmful or fatal if swallowed, and harmful if it comes in contact with your skin or eyes.

Keep brake fluid away from children. Call your doctor immediately if brake fluid is swallowed, and induce vomiting. Flush eyes or skin with water if brake fluid gets in eyes or comes in contact with skin.

⚠ WARNING

The use of any fluid except DOT4 brake fluid from a sealed container can damage the brake system and lead to an accident.

Use only DOT4 brake fluid from a sealed container. Never use or mix different types of brake fluid.

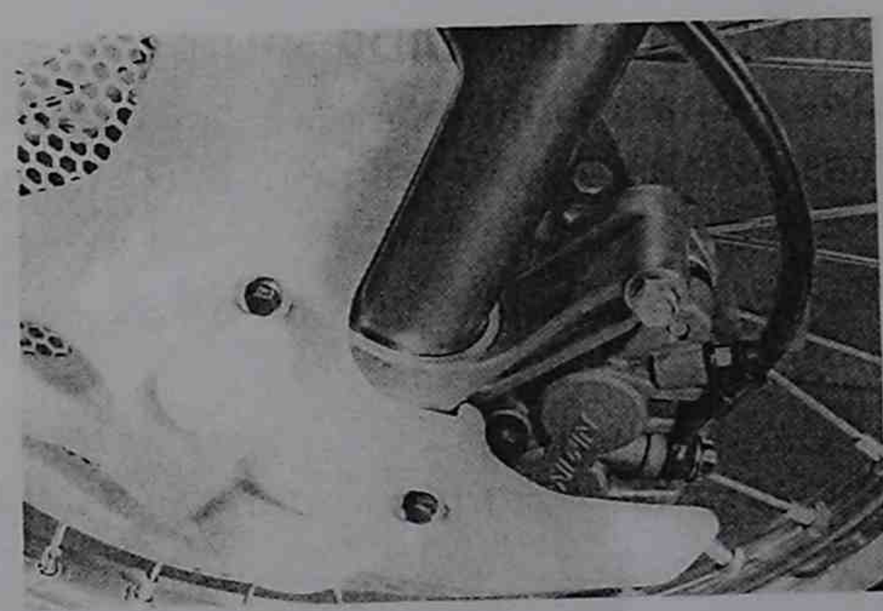

⚠ CAUTION

Spilled brake fluid can damage painted surfaces and plastic parts.

Be careful not to spill any fluid when filling the brake fluid reservoir. Wipe spilled fluid up immediately.

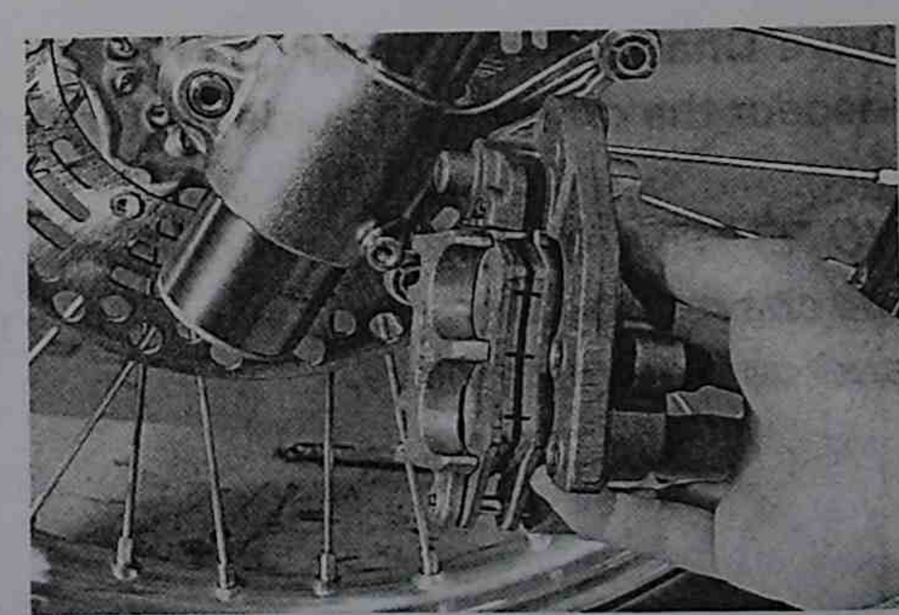

Brake Pad

Inspect the brake pads for wear. If the brake pads are worn, replace them with new ones. (☞ 14-3)

Brake pad wear limit: 1.0 mm (0.04 in)

NOTE:

- *Pump the brake lever/pedal several times to restore the brake pads after replacing the brake pads.*
- *Replace both right and left pads together when replacing the brake pads.*

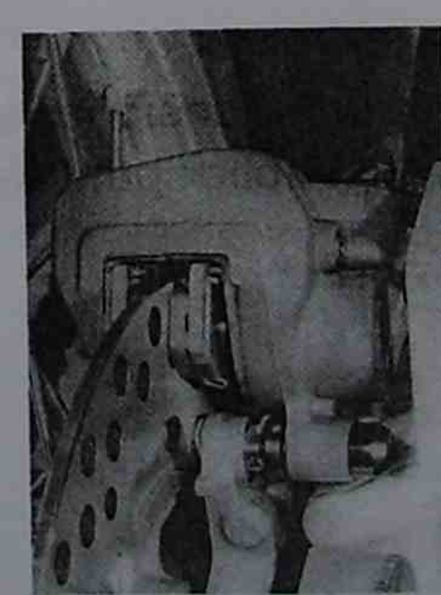

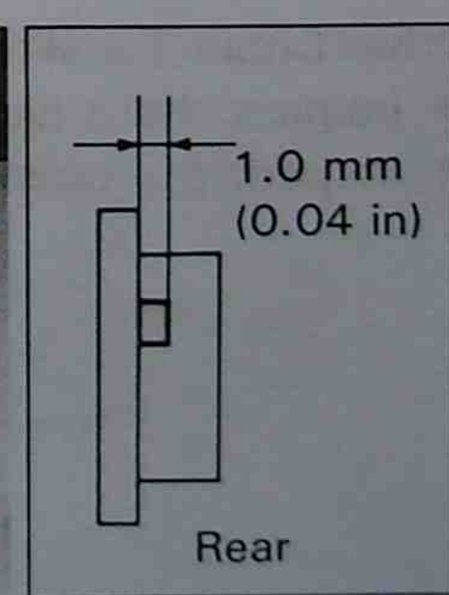

Front Brake Lever Adjustment

Adjust the brake lever play as follows:

- Loosen lock nut ①.
- Turn in or out adjuster ② to obtain the specified play.

Brake lever play: 0.1—0.3 mm (0.004—0.012 in)

- Tighten the lock nut ①.

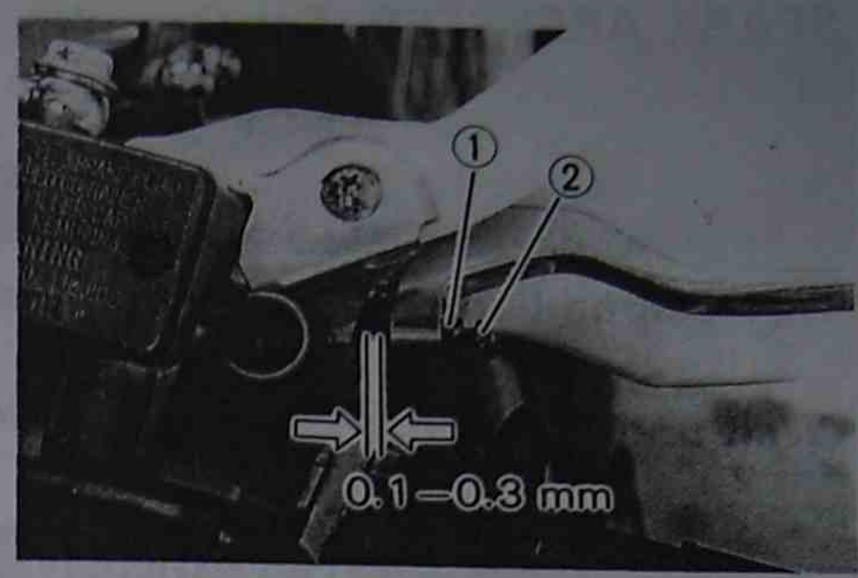

⚠ CAUTION

Brake lever play less than 0.1 mm (0.004 in) can cause brake dragging.

Do not adjust the brake lever play less than 0.1 mm (0.004 in).

Brake Pedal Height Adjustment

Adjust the rear brake pedal height as follows:

- Loosen lock nut ①.
- Adjust the brake pedal height by turning the adjuster ② to locate the pedal 0—10 mm (0—0.4 in) below the top face of the foot rest.
- Tighten lock nut ①.
- Loosen the lock nut ④.
- Turn adjuster ③ so the brake pedal has 5—15 mm (0.2—0.6 in) play at the brake pedal end.
- Tighten lock nut ④.

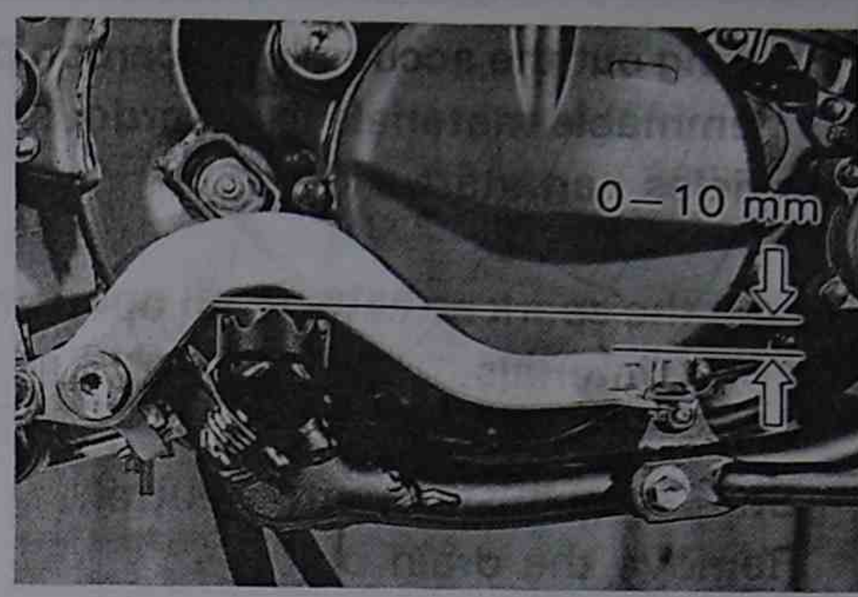

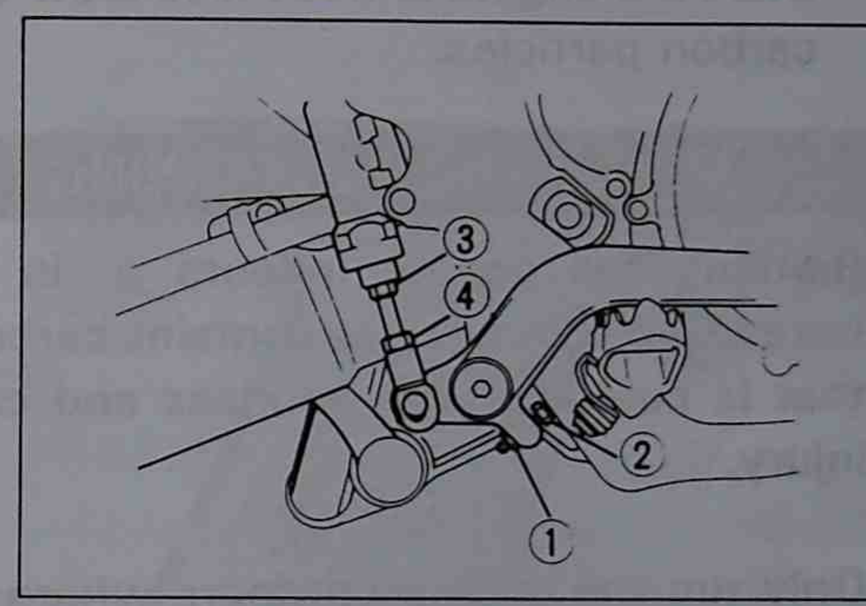

FRONT FORK

- Move the front fork up and down several times and inspect for smooth movement.
- Inspect for damage and oil leaks.
- Inspect the bolts and nuts for tightness.

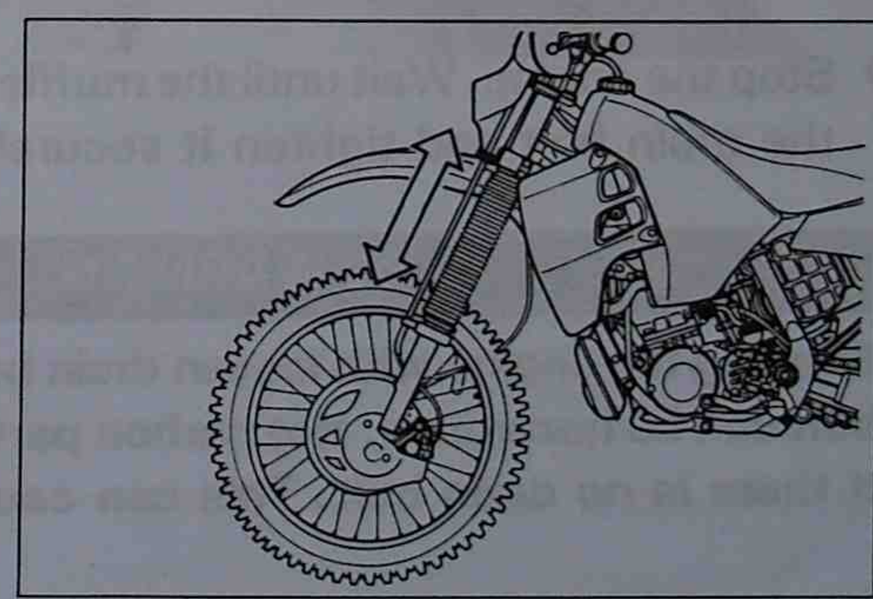

REAR SUSPENSION

- Move the rear suspension up and down several times and inspect for smooth movement.
- Inspect for damage and oil leaks.
- Inspect the bolts and nuts for tightness.

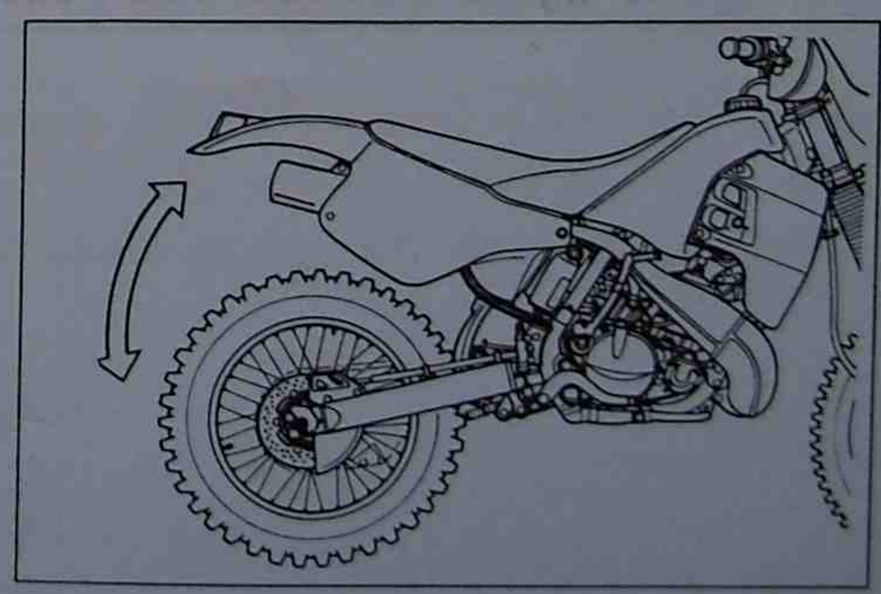

SPARK ARRESTER (For Canada)

Clean the spark arrester as follows:

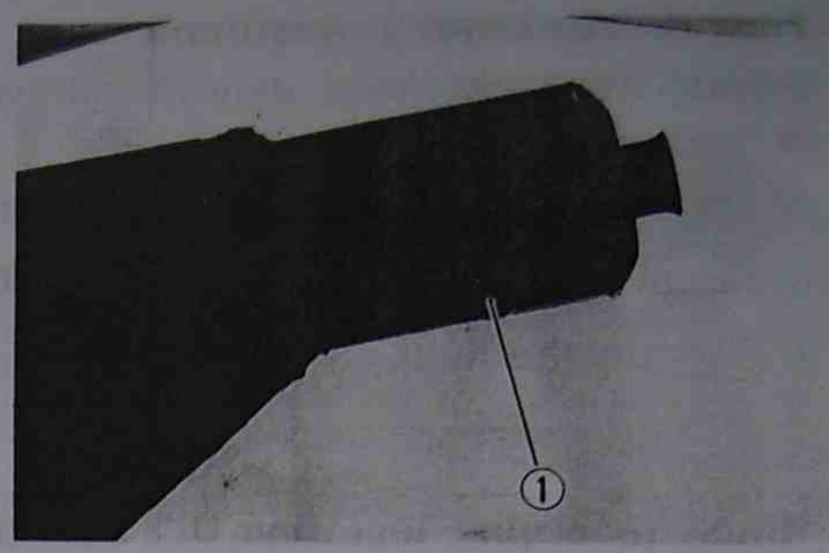

⚠ WARNING

You can be burned if you touch the hot muffler.

Wait until the muffler cools to avoid burns.

⚠ WARNING

Blowing out the accumulated carbon particles where there is flammable materials is hazardous. Exhaust hot carbon particles can start a fire.

Clean the spark arrester in an open area away from flammable materials.

- Shift transmission into neutral.
- Remove the drain bolt ①.
- Start the engine and rev it to blow out the accumulated carbon particles.

⚠ WARNING

Running the engine indoors or in a garage can be hazardous. Exhaust gas contains carbon monoxide, a gas that is colorless and odorless and can cause death or injury.

Only run the engine outdoors where there is fresh air.

- Stop the engine. Wait until the muffler cools, then replace the drain bolt and tighten it securely.

⚠ WARNING

Running the engine with loosen drain bolt or without drain bolt can be hazardous. Hot carbon particles can blow out if there is no drain bolt. This can cause fire.

Be sure to tighten the drain bolt securely.

WHEELS AND TIRES

Wheel Rim

- Inspect the wheel bearing for rattles. Replace the bearings if necessary. (☞ 13-2)
- Inspect the wheel rim runout. (☞ 13-2)

Spoke Nipple and Rim Lock

- Inspect the spokes for tension. Retighten the spoke nipples with a spoke nipple wrench so as all spokes have same tension.
- Inspect the rim lock for tightness.

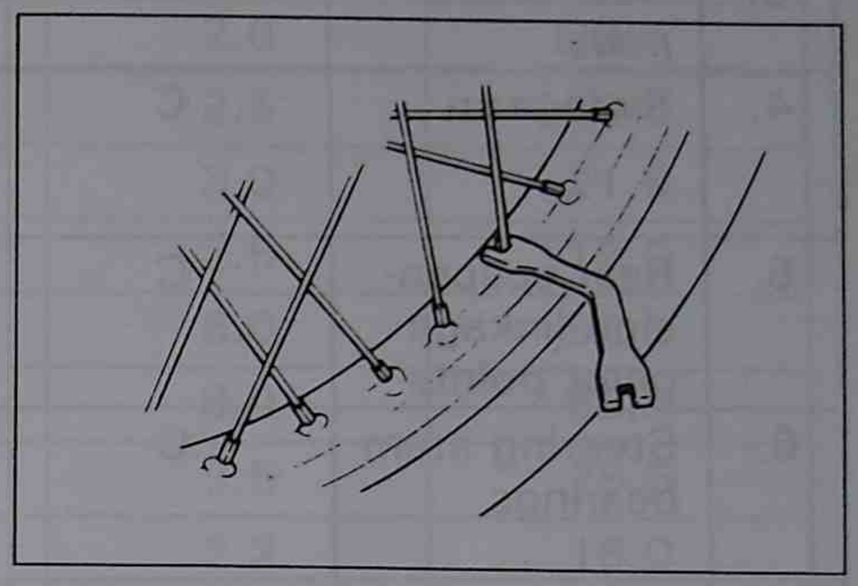

Tire Pressure

- Inspect front and rear tire pressure.
  Cold inflation
  tire pressure: 70—110 kPa
  (0.7—1.1 kg/cm², 10—16 psi)

STEERING

- Inspect the steering by moving the front fork up and down, and right and left. If the steering has play or binds, inspect steering stem head nut tightness and steering bearings.
  (☞ 15-10)

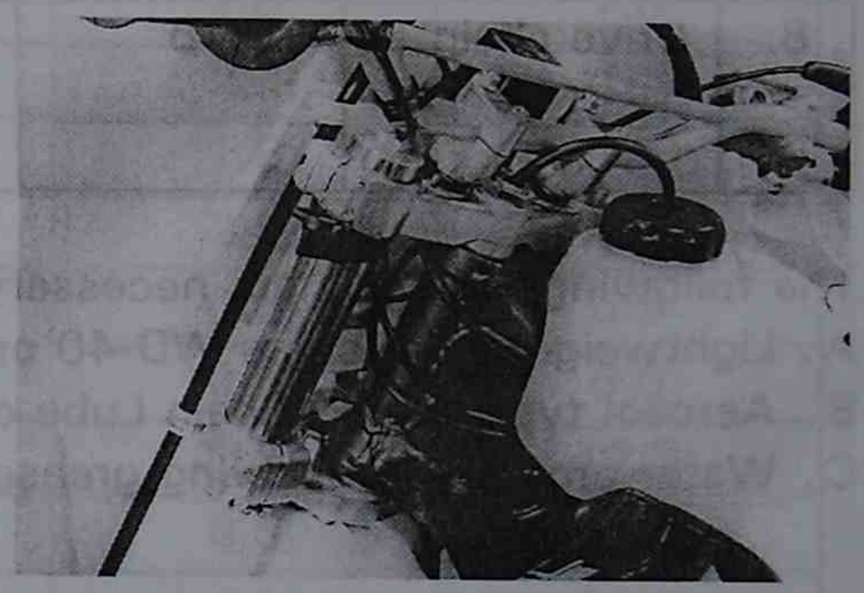

LUBRICATION

Apply grease or oil to the moving parts to increase durability and prevent wear.

No.	ITEM	LUBRICANT	FREQUENCY	COMMENTS
1.	Inner cable ends, lever	A	Pre-race and between every race	Run oil through cables. Lube the cable ends where they pivot.
2.	Throttle grip, throttle housing, cable	A	Pre-race	Lightly oil the inside of throttle spool. Keep free from dirt.
3.	Rear brake pedal	C	Pre-race	Grease the brake pedal pivot.
4.	Swingarm	C	Every 3 races/ More often according to conditions	Clean and pack the bearings. Keep seals fresh.
5.	Rear suspension linkage pivot points	C	Every 3 races/More often according to conditions	Clean and pack the bearings. Keep seals fresh.
6.	Steering stem bearings	C	Every 5 races/More often according to conditions	Clean and pack the bearings. Keep seals fresh.
7.	Choke/idle adjust knob	A	Pre-race	Lightly oil the plunger shaft.
8.	Drive chain	B	Pre-race and between every moto	Keep chain thoroughly lubed at all times. Always check wear and alignment.

The following materials are necessary:

A. Lightweight oil such as WD-40 or penetrating oil.

B. Aerosol type Suzuki Chain Lube or equivalent Lube.

C. Water-proof wheel bearing grease.

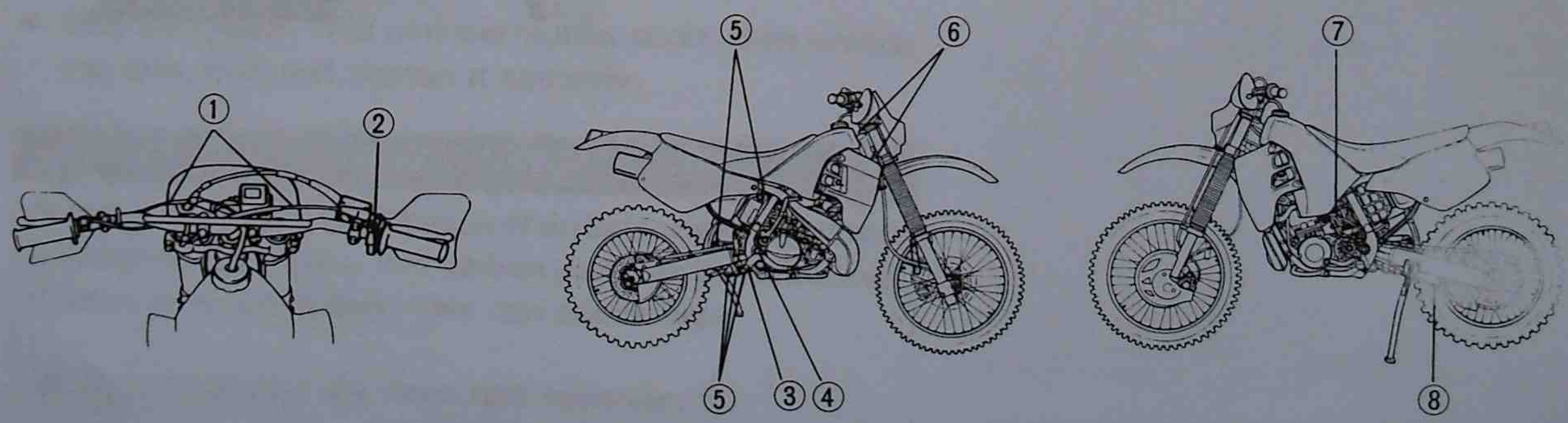

Follow the schedule closely. The disassembly necessary to lubricate many components is in itself valuable preventative maintenance. It allows you to inspect for wear, fatigue, adjustment and fastener tightness and it allows you to clean out the grit which otherwise cannot be gotten out.

TIGHTENING TORQUE

PART	N·m	kg-m	lb-ft
Cylinder head nuts	28	2.8	20.0
Magneto rotor nut	80	8.0	58.0
Cylinder nuts	38	3.8	27.5
Clutch sleeve hub nut	90	9.0	65.0
Primary drive gear bolt	70	7.0	50.5
Exhaust valve arm bolt	10	1.0	7.0
Spark plug	28	2.8	20.0
Handlebar clamp bolts	25	2.5	18.0
Front fork upper clamp bolts (right and left)	30	3.0	21.5
Front fork lower clamp bolts (right and left)	25	2.5	18.0
Front fork center bolt assembly	80	8.0	58.0
Steering stem head nut	90	9.0	65.0
Front fork cap bolts—Front fork inner tube	35	3.5	25.5
Front fork piston rod lock nuts	22	2.2	16.0
Master cylinder set bolts (front)	10	1.0	7.0
Master cylinder set bolts (Rear)	10	1.0	7.0
Brake hose union bolt	23	2.3	16.5
Brake pad mounting bolts (front and rear)	18	1.8	13.0
Brake caliper mounting bolts (front)	25	2.5	18.0
Disk plate screws	9	0.9	6.5
Brake bleeder plugs (front and rear)	8	0.8	6.0
Front axle holder bolts	17.5	1.75	12.5
Front axle	65	6.5	47.0
Engine mounting nuts	41	4.1	30.0
Rear axle nut	100	10.0	72.5
Rear sprocket nuts	28	2.8	20.0
Spoke nipples	3	0.3	2.0
Rear swingarm pivot nut (engine mounting)	70	7.0	50.5
Rear shock absorber fitting nuts (upper and lower)	60	6.0	43.5
Rear cushion lever center nut	100	10.0	72.5
Rear cushion lever front nut	80	8.0	58.0
Rear cushion rod nut	100	10.0	72.5

TROUBLESHOOTING
ENGINE

Complaint	Possible Cause	Remedy
Engine does not start or hard to start	Fuel deterioration	Replace
	No fuel flow to the carburetor	
	• Fuel valve clogged	Clean
	• Fuel hose clogged	Clean or replace
	• Fuel tank cap breather hose clogged	Clean
	• Carburetor float valve malfunction	Replace
	Carburetor overflow pipe clogging	Clean
	Carburetor air vent pipe clogging	Clean
	Too rich air/fuel mixture in combustion chamber	Scavange
	Incorrect ignition timing	Adjust
	No spark at spark plug	☞ 12-2
	Low compression	
	• Piston ring worn or stuck	Replace
	• Cylinder worn	Replace
	• Air leak from cylinder gasket	Replace
	• Air leak from crankshaft oil seal	Replace
Engine stalls	Fuel deterioration	Replace
	Fouled spark plug	Clean or replace
	Fuel hose clogged	Clean or replace
	Air cleaner clogged	Clean or replace
	Carburetor jets clogged	Clean
	Low compression	
	• Piston ring worn or stuck	Replace
	• Cylinder worn	Replace
	• Air leak from cylinder gasket	Replace
	• Air leak from crankshaft oil seal	Replace
	Incorrect ignition timing	Adjust
	Carburetor fuel level maladjustment	Adjust
Insufficient power	Fuel deterioration	Replace
	Brake dragging	Adjust
	Exhaust pipe cracked or clogged with carbon	Replace or clean
	Exhaust valve maladjustment	Adjust
	Exhaust valve carbon deposits	Clean
	Air cleaner element clogged	Clean or replace
	Carburetor jets clogged	Clean or replace
	Incorrect fuel level in carburetor	Adjust
	Incorrect spark plug gap	Adjust or replace
	Cylinder or piston ring worn	Replace
	Reed valve malfunction	Replace
	Incorrect ignition timing	Adjust
	Incorrect main jet setting	Adjust

Complaint	Possible Cause	Remedy
Engine runs poorly in low speed range	Wide spark plug gap Carburetor air screw maladjustment Incorrect carburetor fuel level Improper jet needle size Incorrect ignition timing CDI unit malfunction Ignition coil damage Magneto malfunction Magneto short circuit	Adjust or replace Adjust Adjust Replace Adjust Replace Replace Replace Replace
Engine runs poorly in high speed range	Narrow spark plug gap Incorrect carburetor fuel level Incorrect main jet setting Retarded ignition timing CDI unit malfunction Ignition coil damage Air cleaner element clogged Magneto short circuit Exhaust pipe cracked Exhaust valve malfunction Piston ring stuck	Adjust or replace Adjust Adjust Adjust Replace Replace Clean or replace Replace Replace Clean, adjust or replace Replace
Engine speed does not return to idle speed	Too high engine idle speed	Adjust
Exhaust valve does not work	Carbon deposits on exhaust valve Exhaust valve damage Exhaust valve shaft damage Valve spring damage	Clean Replace Replace Replace
Spark plug does not ignite	Ignition coil malfunction Spark plug malfunction Generator malfunction CDI unit malfunction Wide spark plug gap Engine kill switch malfunction	Replace Replace Replace Replace Adjust Repair or replace
Carbon deposits on spark plug porcelain	Too rich air/fuel mixture Too rich oil/gasoline mixture Improper spark plug heat range	Adjust Adjust Replace
Spark plug electrode damage	Improper spark plug heat range Overheating Incorrect ignition timing Loose spark plug Too lean air/fuel mixture	Replace ☞ 3-3 Adjust Tighten Adjust

Complaint	Possible Cause	Remedy
Overheating	Low engine coolant level	Replenish
	Engine coolant leak	Repair
	Too lean air/fuel mixture	Adjust
	Incorrect ignition timing	Adjust
	Water pump malfunction	Adjust or replace
	Cylinder head carbon deposits	Clean
	Cylinder head gasket damage	Replace
	Exhaust pipe carbon deposits	Clean or replace
	Improper spark plug heat range	Replace
	Fuel deterioration	Replace
	Clutch slipping	Adjust or replace
	Radiator cap loose	Tighten
	Radiator fins damaged	Repair or replace
Excessive engine coolant level decrease	Radiator hose cracked or damaged	Replace
	Loose radiator hose connection	Repair
	Radiator cracked or damaged	Repair or replace
	Water pump cover mating surface damage	Replace
	Water pump cover crack	Replace
	Water pump cover gasket damage	Replace
	Water seal wear or damage	Replace
	Radiator cap seal damage	Replace
	Incorrect radiator cap valve pressure	Replace
	Cylinder or cylinder head cracked	Replace
	Cylinder or cylinder head gasket damage	Replace
Clutch does not disengage	Clutch lever play maladjustment	Adjust
	Clutch spring damage	Replace
	Clutch plates distortion	Replace
Clutch slipping	Clutch cable play maladjustment	Adjust
	Weakened clutch spring	Replace
	Clutch pressure plate wear	Replace
	Clutch plate distortion	Replace
	Clutch plates worn	Replace
Transmission does not shift	Gearshift cam damage	Replace
	Gearshift fork distortion	Replace
	Gearshift pawl wear	Replace
Transmission gears jump out	Gearshift fork groove wear or damage	Replace
	Gearshift fork distortion or wear	Replace
	Gearshift cam stopper damage	Replace
Gearshift lever does not return	Weakened gearshift return spring	Replace
	Gearshift lever sticking	Repair or replace

CHASSIS

Complaint	Possible Cause	Remedy
Heavy handling	Steering stem nut overtightened Steering head bearings damaged or rusted Steering stem distortion	Adjust Replace Replace
Front wheel wobbling	Loose spoke nipples Wheel distortion Front wheel bearing damage Incorrect axle tightening torque	Adjust Replace Replace Retighten
Rear wheel wobbling	Loose spoke nipples Wheel distortion Rear wheel bearing damage Swingarm pivot bearing damage Incorrect axle tightening torque Incorrect swingarm tightening torque	Adjust Replace Replace Replace Retighten Retighten
Soft front suspension	Weakened spring Low oil level Low fork oil viscosity Damping force maladjustment Damping valve malfunction	Replace Replenish Replace Adjust Replace
Hard front suspension	High fork oil level High fork oil viscosity Damping force maladjustment Inner tube distortion	Adjust Replace Adjust Replace
Soft rear suspension	Weakened spring Damping force maladjustment Low gas pressure	Replace Adjust Adjust
Hard rear suspension	Damping force maladjustment Damper rod distortion Rear suspension pivoting portion out of grease	Adjust Replace Lubricate
Poor braking	Brake pads worn Improper air bleeding Dirty pads and disc Brake fluid leak	Replace Bleed air Clean Repair
Brake noise	Brake pads worn Brake disk worn Dirty brake pads and disk	Replace Replace Clean

MACHINE TUNING

CARBURETOR

The carburetion of your motorcycle was carefully selected after extensive testing. You will find that the carburetion will function smoothly under many varied operating conditions. For best results we recommend that the adjustments and carburetion jetting be left "as is" from the factory.

Some riders may operate their motorcycle under extreme operating conditions such as; very high altitudes or extreme cold and hot temperatures. In these circumstances the jetting of the carburetor or other adjustments may need to be altered slightly. Riders who are not familiar with the operation and jetting procedures of the KEIHIN carburetor should have their local authorized Suzuki dealer perform these alterations. Mechanically experienced riders can alter the carburetor settings based on the following information and specifications.

Carburetor Specifications

Bore	38 mm
Main jet	#180
	#165 ... for Canada
Jet needle	R1472M1L-3rd ←
Cut-away	5
Slow jet	#60
Air screw	1 turn out
Float height	16.0±1.0 mm
	(0.63±0.04 in)

PRINCIPLES OF CARBURETOR TUNING

Carburetor Components and Functions

The carburetor consists of a number of parts as shown below. The asterisk (*) marked parts are precisely machined, which meter the intake air (oxygen) and fuel so that the air/fuel mixture ratio is controlled accurately. They can be divided by three operation-related groups; pilot (slow) system, intermediate system and main system, and they achieve their functions in each corresponding throttle opening range. It is necessary to have a full understanding of them for proper carburetor tuning.

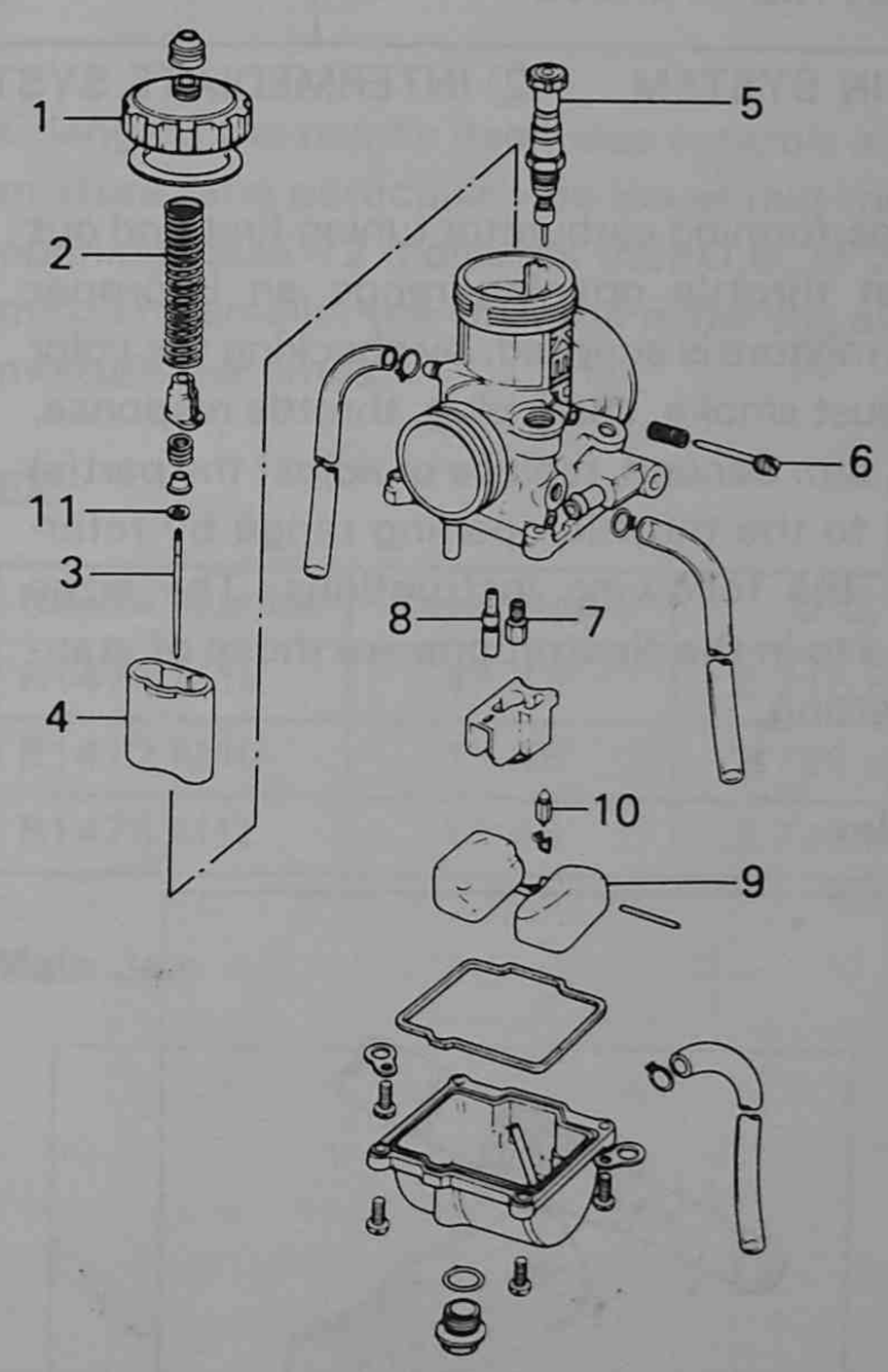

1. Top cap
2. Spring
3. *Jet needle
4. Throttle valve
5. Starter plunger
6. *Air screw
7. *Main jet
8. *Slow jet
9. Float
10. Needle valve assembly
11. Clip

As shown below, each of the asterisk (*) marked parts is located between the air/fuel passage and has its own air/fuel mixture adjustable range in terms of the throttle valve opening. The chart indicates that the carburetor can supply correct air/fuel mixture to the engine in any range because of the overlapping adjustable range of the each part.

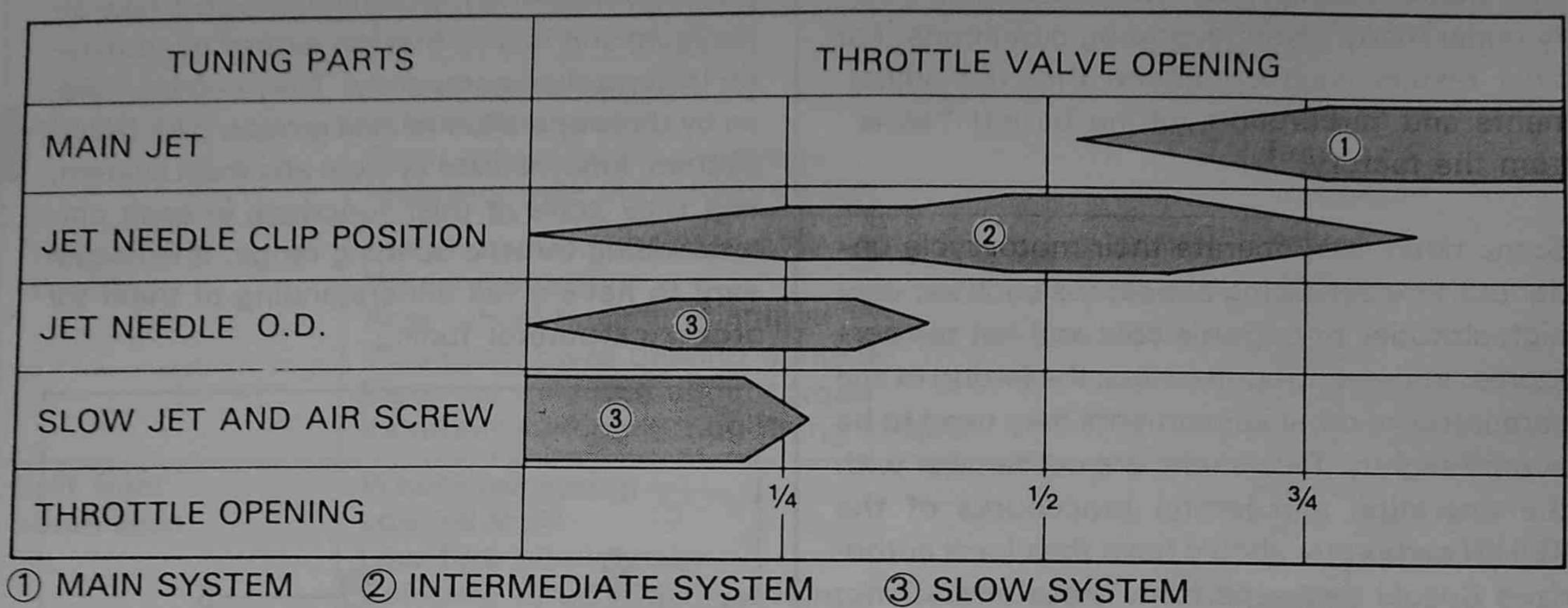

When performing carburetor tuning first find out in what throttle opening range an improper air/fuel mixture is supplied, by checking the color of exhaust smoke, spark plug, throttle response, power, etc. Second, replace or adjust the part(s) related to the throttle opening range by referring to the following instructions. The sizes referred to in the illustrations are those of standard setting.

Slow Jet

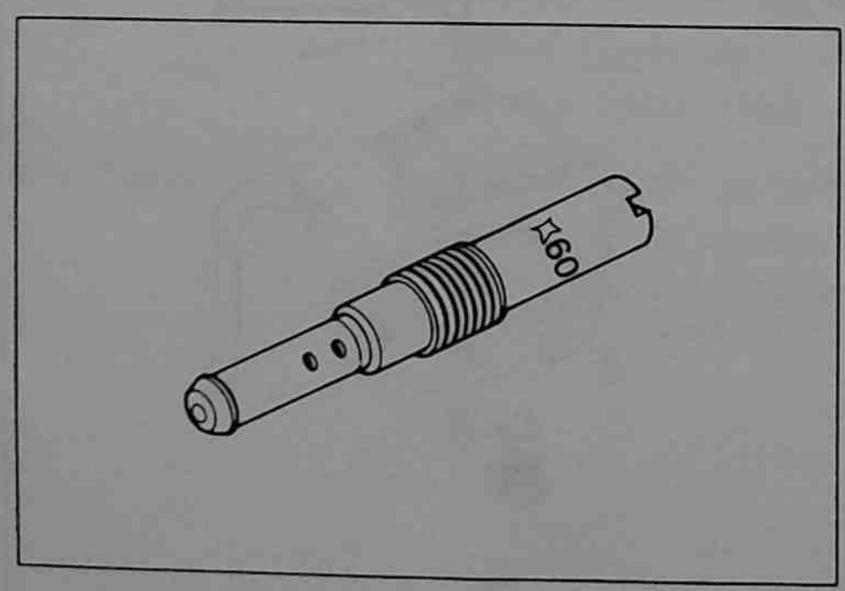

The slow jet meters the fuel supplied to the slow system. Each jet size is indicated by a number. Larger number means a larger bore diameter and fitting a larger numbered slow jet enriches the air/fuel mixture.

Air Screw

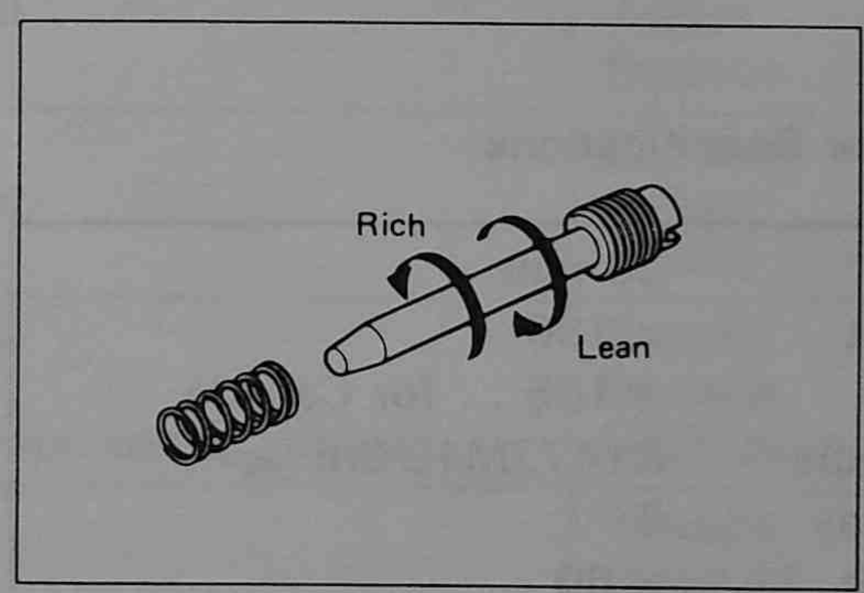

The air screw is located in the inlet air passage and meters the air for the pilot system. As it has a right-hand thread, tightening it makes the passage narrower, allowing less amount of intake air to flow and resulting in richer air/fuel mixture. Air flow adjustment is effective within a range of ½—2 turns out.

Needle Clip Position

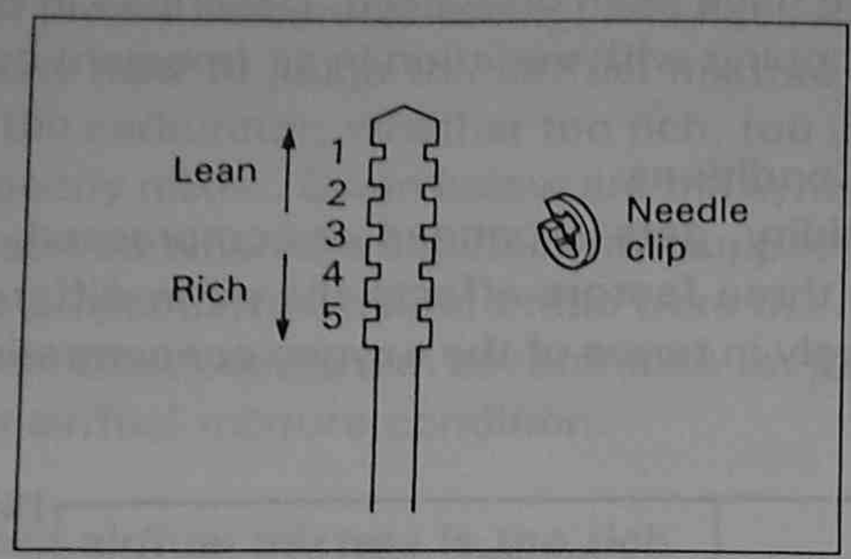

The jet needle is linked to the throttle valve by means of the needle clip. Its lower part is tapered and it has five grooves cut in the upper part where the needle clip fits.

To adjust the air/fuel mixture with the jet needle, change the position of the needle clip. The lower groove the clip is moved to, the higher the jet needle rises and the larger the clearance with the needle jet becomes, resulting in a richer air/fuel mixture ratio.

The needle clip position can be changed by half to fine-tune the setting. To change the needle clip position by half, change jet needle from M1L type to N1L type. This change will move the needle position by half to the leaner side. N1L type jet needles are available as optional parts.

Air/fuel mixture	Needle type and clip position
Lean	R1472N1L-1st
	R1472M1L-1st
	R1472N1L-2nd
	R1472M1L-2nd
	R1472N1L-3rd
	R1472M1L-3rd
	R1472N1L-4th
	R1472M1L-4th
	R1472N1L-5th
Rich	R1472M1L-5th

Jet Needle

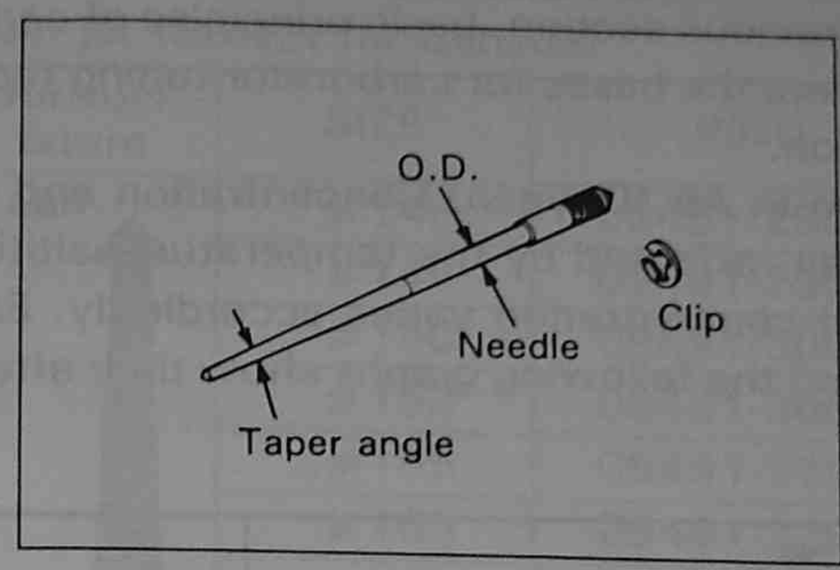

Needle number

R 14 72 M1L

O.D. 2.725 mm

Taper angle 1° 45′

Changing the needle itself also controls air/fuel mixture ratio particularly on lower mid-throttle opening. Size 72 indicates that O.D. is 2.725 mm. The smaller the O.D. the richer the air/fuel mixture becomes.

EX.

Needle Number	Taper Angle	O.D.
R1471 M1L	1° 45′	2.715 mm
R1472 M1L	1° 45′	2.725 mm
R1473 M1L	1° 45′	2.735 mm

Main Jet

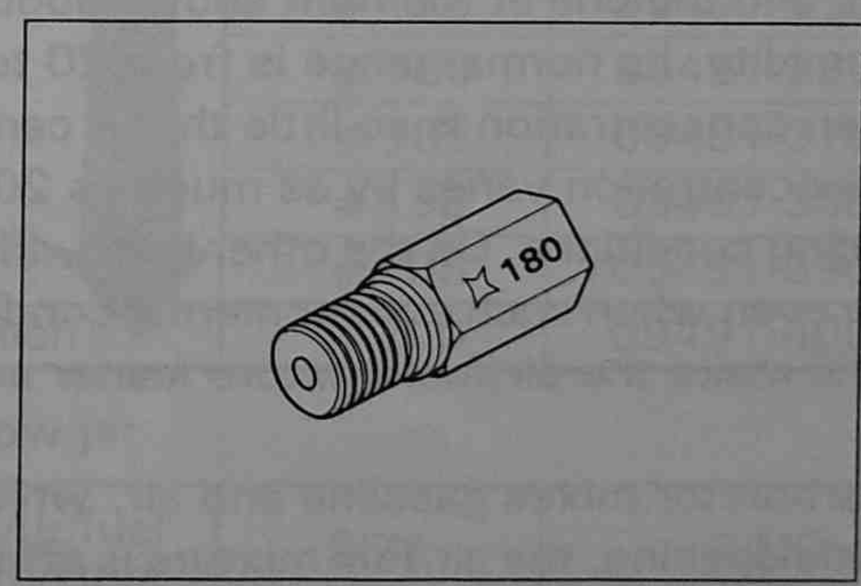

The main jet, like the slow jet, meters fuel flow.

CARBURETOR TUNING IN PRACTICE

In the previous section, basic principles of carburetor tuning have been discussed. Described in this section are the bases for carburetor tuning required when coping with variation in air (oxygen) concentration.

Variation in Air (Oxygen) Concentration and Carburetor Conditions

As the air, affected by the temperature, altitude and humidity, gets expanded or compressed, air (oxygen) concentration varies accordingly. Each of these three factors affects the air in different ways, and the following graphs show their effects respectively in terms of the oxygen concentration.

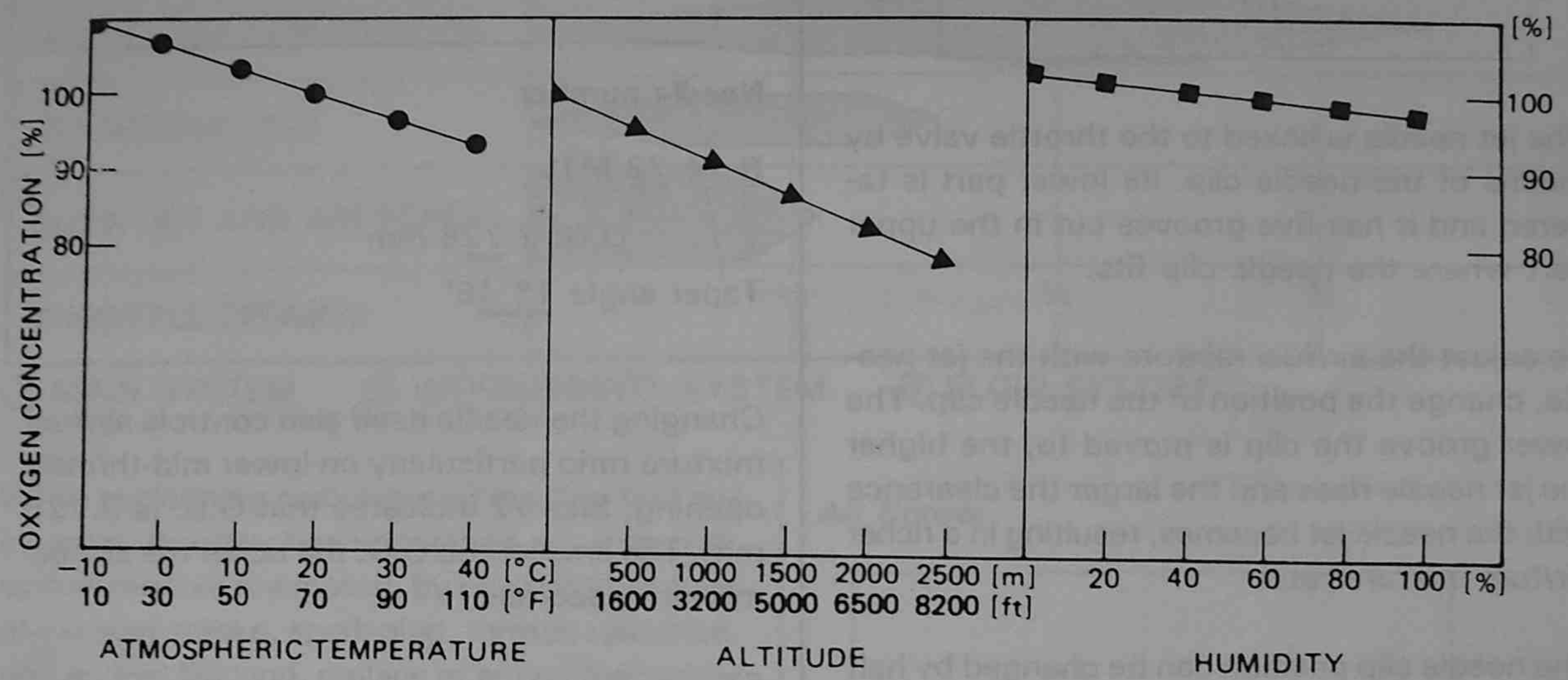

In the above graphs, oxygen concentration is graduated on the vertical axis while the temperature, altitude and humidity are on the horizontal axis respectively. Oxygen concentration is set 100% under the conditions of 20°C (68°F), 0 m (0 ft) and 50% humidity. The standard carburetor setting is chosen to obtain the best engine performance under these conditions.

The graph at the left shows that the oxygen concentration changes about 10% in the 0° to 40°C temperature difference, the one in the center shows about 20% change in the 0 to 2 000 m altitude difference and the one at the right shows about 5% change in the 0 to 100% humidity difference. As for humidity, its normal range is from 20 to 95%. Therefore the possible effect of humidity on the oxygen concentration is so little that it can be disregarded. Consequently, we can say that the oxygen concentration varies by as much as 20% depending on the temperature and altitude under normal riding conditions. On the other hand, different from the air, the fuel (gasoline) hardly changes in volume even when such environmental conditions change. Therefore, increase in oxygen concentration will make the air/fuel mixture leaner and decrease will enrich it.

As the carburetor mixes gasoline and air, which are metered by each jet in varying proportions to suit throttle opening, the air/fuel mixture is affected if the air concentration itself varies as described above. Then proper engine power output can not be attained and, should the mixture become too lean, a piston seizure may result. To compensate for such change in the air concentration, it is required to carry out carburetor tuning beforehand. This requirement applies to all models of motorcycles and ATVs if they are used in areas where temperature and altitude range widely. The next section describes the procedure of the above tuning in detail.

Judging Air/Fuel Mixture

For proper carburetor tuning, it is necessary to know how to judge the air/fuel mixture made in the carburetor; whether too rich, too lean or properly mixed. Given below are the symptoms observed when the engine is not supplied with the proper air/fuel mixture ratio from the carburetor. Check each item as reference for judging the air/fuel mixture condition.

When air/fuel mixture is too rich

1) The engine noise is dull and intermittent.
2) The engine condition becomes worse when the choke is applied.
3) The engine condition becomes worse as it is warmed up.
4) The engine condition improves when the air cleaner is removed.
5) The spark plug is fouled with carbon (wet and oily).
6) The exhaust gas produces heavy smoke.
7) The engine does not rev up smoothly or shows poor power in high speed range.

When air/fuel mixture is too lean

1) The engine overheats.
2) The engine condition improves when the choke is applied.
3) Acceleration is poor.
4) The spark plug is burned white.
5) The speed of the engine fluctuates and lack of power is noticed.
6) The engine speed varies even when the throttle valve opening is kept constant.
7) Detonation and pinging are experienced.

Included Parts and Optional Parts

Main jet (Except for Canada)

Air/fuel ixture	SIZE	P/NO
Lean	#145	09491-29014
	#148	09491-29015
	#150	09491-30018
	#152	09491-30019
	#155	09491-31012
	#165	09491-33009
	#170	09491-34010
	#172	09491-34011
	*#175	09491-35009
	*#178	09491-35010
	#180	09491-36008
	*#185	09491-37008
	*#190	09491-38011
	#195	09491-39001
Rich	#200	09491-40013

Main jet (For Canada)

Air/fuel mixture	SIZE	P/NO
Lean	#145	09491-29014
	#148	09491-29015
	*#150	09491-30018
	#152	09491-30019
	#155	09491-31012
	#165	09491-33009
	*#170	09491-34010
	#172	09491-34011
	*#175	09491-35009
	#178	09491-35010
	*#180	09491-36008
	*#185	09491-37008
	#190	09491-38011
	#195	09491-39001
Rich	#200	09491-40013

Slow jet

Air/fuel mixture	SIZE	P/NO
Lean	#50	09492-50023
	#55	09492-55017
	#60	09492-60016
	#65	09492-65008
Rich	#70	09492-70009

Jet needle

Air/fuel mixture	SIZE	P/NO
Lean	R1474 M1L	13380-29E10 (set)
	R1473 M1L	
	R1471 M1L	
	R1470 M1L	
	R1472 M1L	13383-29E40
	R1474 N1L	13380-29E20 (set)
	R1473 N1L	
	R1472 N1L	
	R1471 N1L	
Rich	R1470 N1L	

NOTE:
SHADED: STANDARD
* : INCLUDED ALTERNATE PARTS
NONE : OPTIONAL PARTS

Tuning Procedure

The following indicates the correct tuning procedure for this motorcycle. Understand the procedure by first riding the motorcycle where it will be used and adjust the engine to the best condition after judging the air/fuel mixture.

Carburetor standard setting

Main jet	: #180
	#165 ... for Canada
Jet needle	: R1472M1L-3rd
Slow jet	: #60
Air screw	: 1 turn out

① Adjustment of slow system

1) Set the pilot air screw as specified.
2) See if the selected pilot jet is correct or not by judging the air/fuel mixture. If air/fuel mixture is rich, replace it with smaller one. If air/fuel mixture is lean, replace it with larger one.

> **Ex.** Slow jet #60
> If air/fuel mixture is rich, replace it with #55 slow jet. If air/fuel mixture is lean, replace it with #65 slow jet.

② Adjustment of main system

With the throttle opened ¾ to full, make main system adjustment monitoring the air/fuel mixture condition after completion of slow system settings.

> **Ex.** Main jet #180
> If air/fuel mixture is rich, replace it with #178 main jet. If air/fuel mixture is lean, replace it with #185 main jet.

③ Adjustment of intermediate system

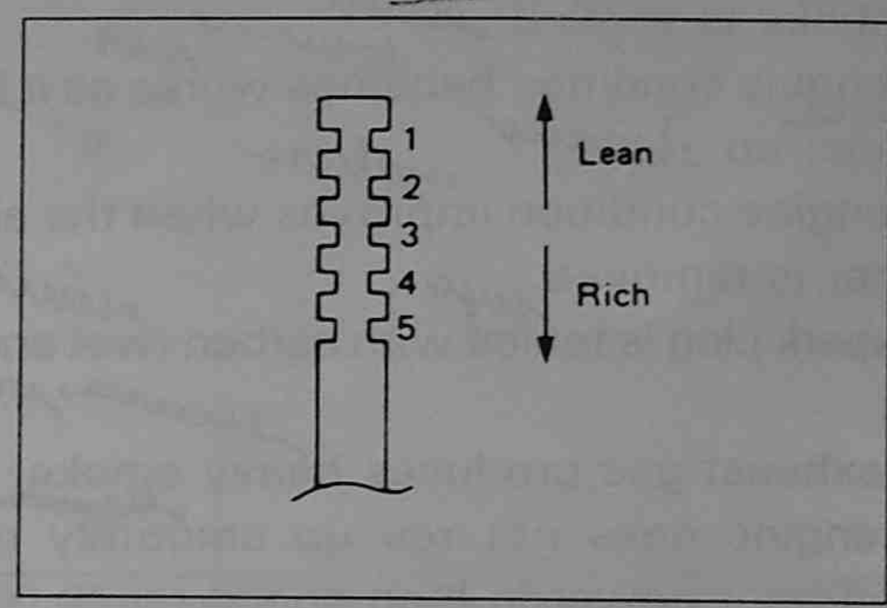

Monitor the air/fuel mixture condition and adjust the intermediate system by changing the needle clip position.

④ Final adjustment of pilot system

After a proper standard setting has been obtained by the procedure ① through ⑤, fine tune the carburetor according to the actual race conditions.

1) Adjust the air/fuel mixture by turning the air screw within ½—2 turns out.
   ½ turn out
   1 turn out—Standard
   1-½ turn out
   2 turns out
2) If the mixture can not be adjusted by the air screw within ½—2 turns out range, readjust the slow system ③.

⑤ Final adjustment of intermediate system

Fine tune the intermediate system by changing the clip position.

FRONT FORK

The front fork compression and rebound damping force, and oil level are adjustable for rider's preference, rider's weight and course condition.

NOTE:

- *Break-in new front forks before attempting adjustment. (☞1-4)*
- *Be sure to adjust both right and left front forks equally.*

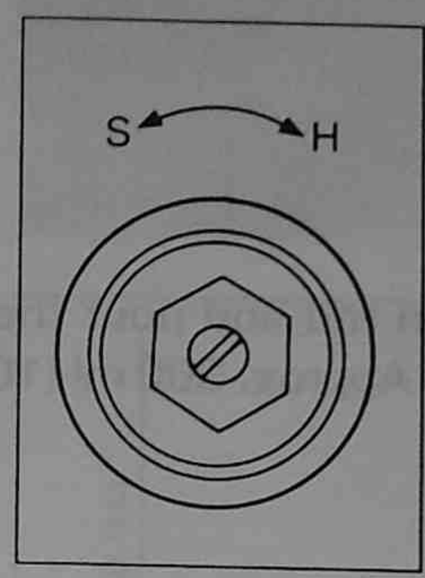

Compression Damping Force Adjustment

- Turn the adjuster screw clockwise until it stops (full hard position).

NOTE: To set the adjuster, you must gently turn the adjuster screw clockwise until it stops, then back it out the recommended number of turns. Do not force the adjuster screw past the stopped position or you may damage the adjuster.

- Turn the adjuster screw counterclockwise and the 14th position is the standard position.

Standard setting: 14th click

Rebound Damping Force Adjustment

- Turn the adjuster screw clockwise until it stops (full hard position).

NOTE: To set the adjuster, you must gently turn the adjuster screw clockwise until it stops, then back it out the recommended number of turns. Do not force the adjuster screw past the stopped position or you may damage the adjuster.

- Turn the adjuster screw counterclockwise and the 12th position is the standard position.

Standard setting: 12th click

colocar, localizar

Air Pressure Adjustment

bloquear elevar rodar

- Place a block under the chassis tube to lift the front wheel off the ground. solo
- Remove the air bleed screw and equalize the air pressure in the front forks to atmospheric pressure.

Standard air pressure: 0 kg/cm² (0 psi)

- Re-fit the air bleed screw.

Front Fork Oil Replacement and Oil Level Adjustment

- Remove the front forks. (☞15-2)
- Remove the front fork cap bolts and springs. (☞15-3)
- Drain front fork oil. (☞15-3)

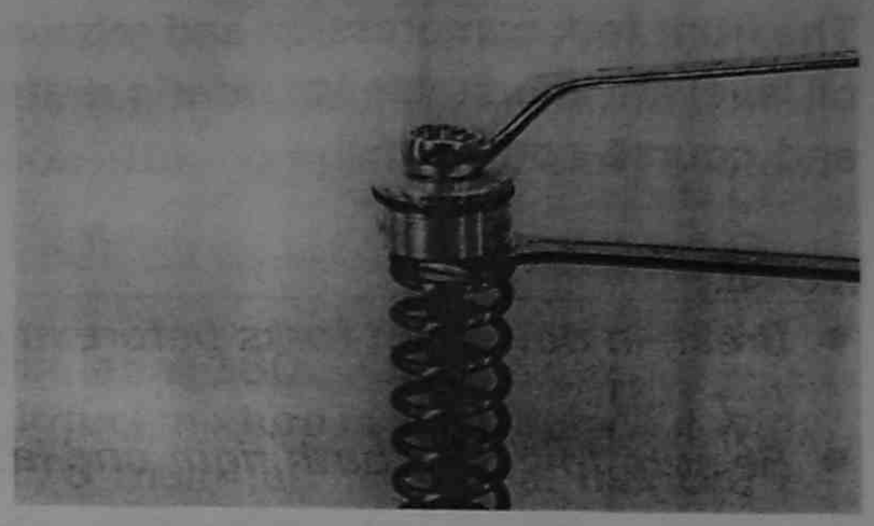

- Pull up the piston rod and pour the specified fork oil. [Half of Capacity: Approx. 300 ml (10.1/10.6 US/Imp oz)]

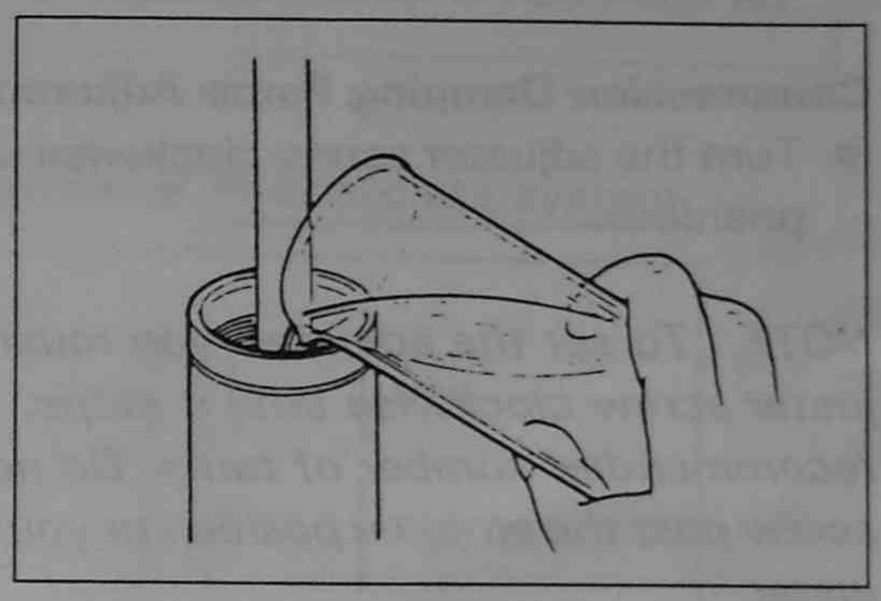

Front Fork Oil Air Bleeding

- Lift the inner tube up. Cover the inner tube top end with your hand and move the inner tube several strokes.

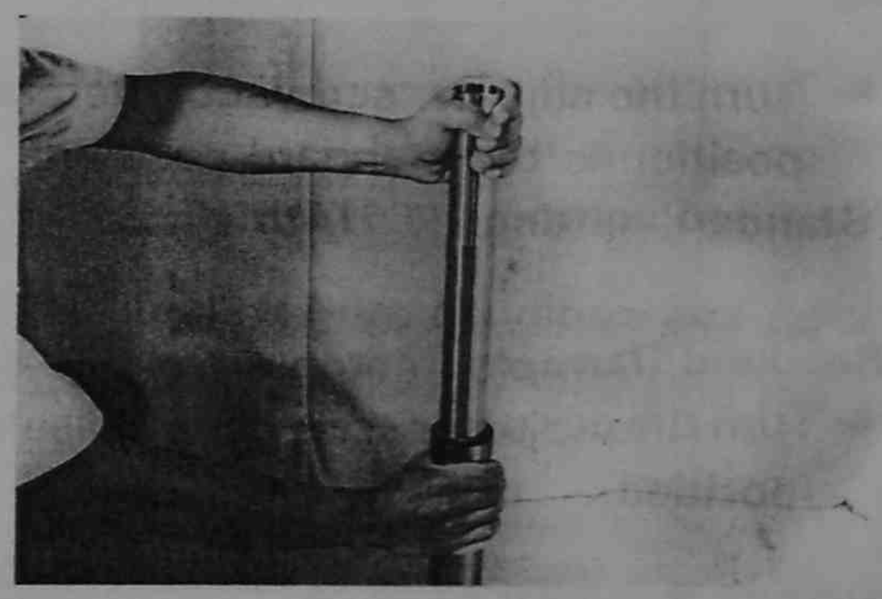

- Move the piston rod several strokes while holding the top of the piston rod with your finger.

NOTE: Unless the top of the piston rod is held down, the push rod will come out. Be sure to hold down the top of the piston rod.

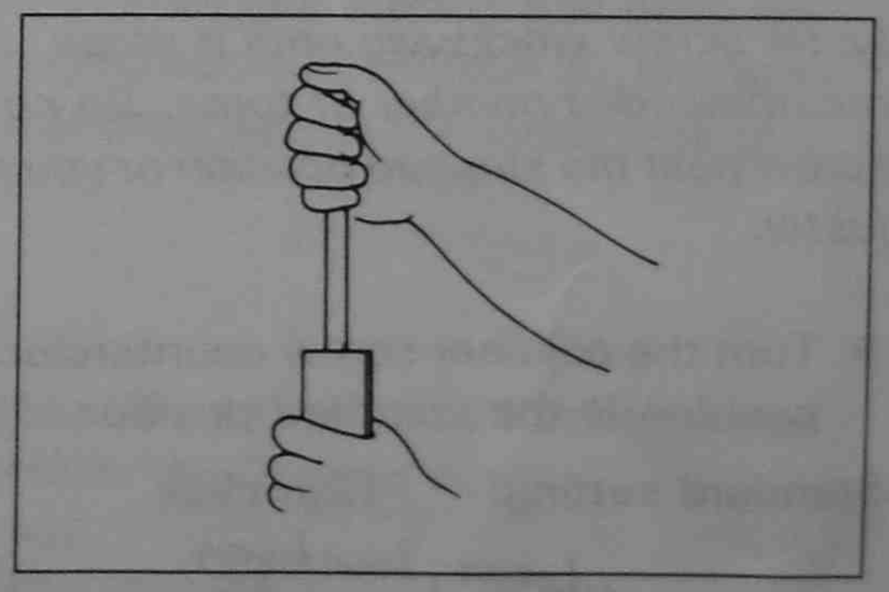

- Pour the rest of oil a little and move the piston rod several strokes. Repeat the same process until no more bubbles come from oil.

- Wait 10 minutes and then measure the oil level.
- Compress the front fork fully. Set the fork in a vertical position and measure the oil level from the top end of the inner tube.

Oil type: SUZUKI FORK OIL SS-05 or equivalent fork oil
Standard oil capacity: 627 ml
(21.2/22.1 US/Imp oz)
Oil level range: 110—140 mm (4.3—5.5 in)
Standard oil level: 120 mm (4.7 in)

TOOL 09943-74111: Front Fork Oil Level Gauge

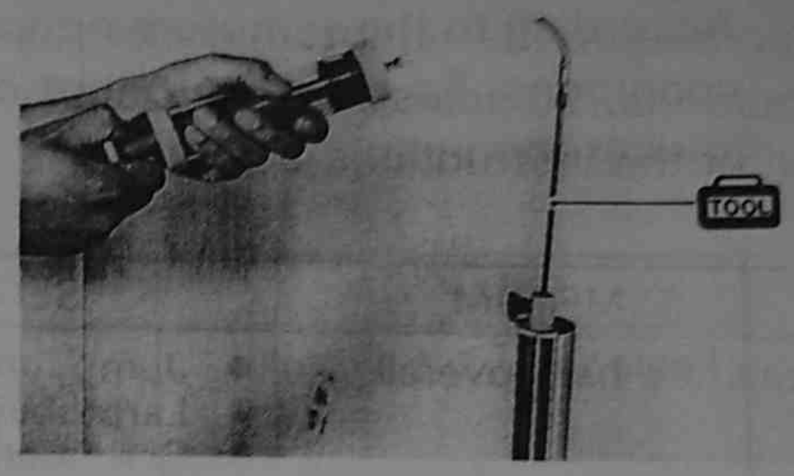

Oil level	Oil quantity
110 mm (4.3 in)	639 ml (21.6/22.5 US/Imp oz)
115 mm (4.5 in)	633 ml (21.4/22.3 US/Imp oz)
120 mm (4.7 in)	627 ml (21.2/22.1 US/Imp oz)
125 mm (4.9 in)	621 ml (21.0/21.9 US/Imp oz)
130 mm (5.1 in)	615 ml (20.8/21.7 US/Imp oz)
135 mm (5.3 in)	609 ml (20.6/21.5 US/Imp oz)
140 mm (5.5 in)	603 ml (20.4/21.3 US Imp oz)

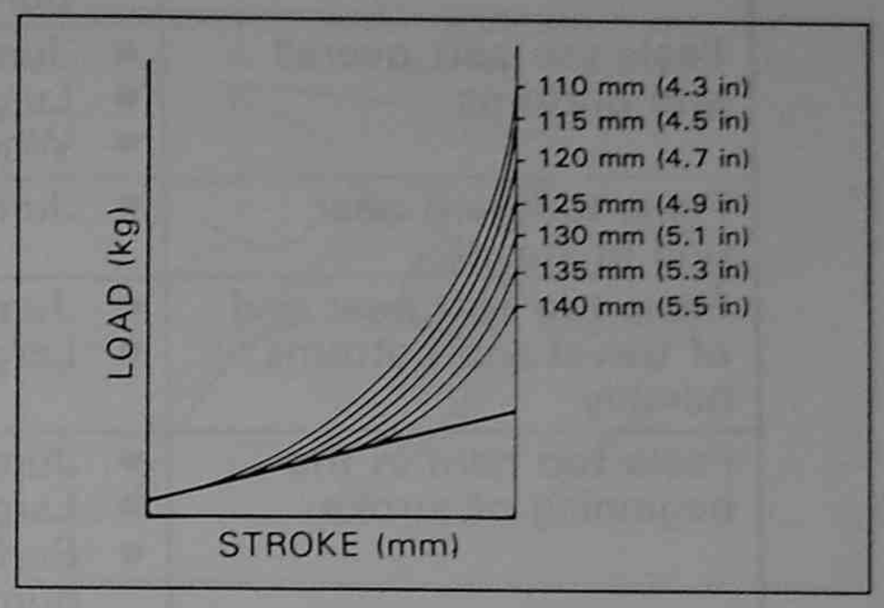

NOTE: An oil level lower or higher than the above range will affect the front fork performance. Be sure to adjust the front fork oil level within the above range.

- Reinstall the spring into the inner tube.
- Pull up the fork cylinder with the special tool.

TOOL 09940-52841: Front fork inner rod holder

- Reinstall the washer and the fork cap bolt to the piston rod and tighten the piston rod lock nut. (☞15-8)
- Fit the inner tube to the fork cap bolt and temporarily tighten it.

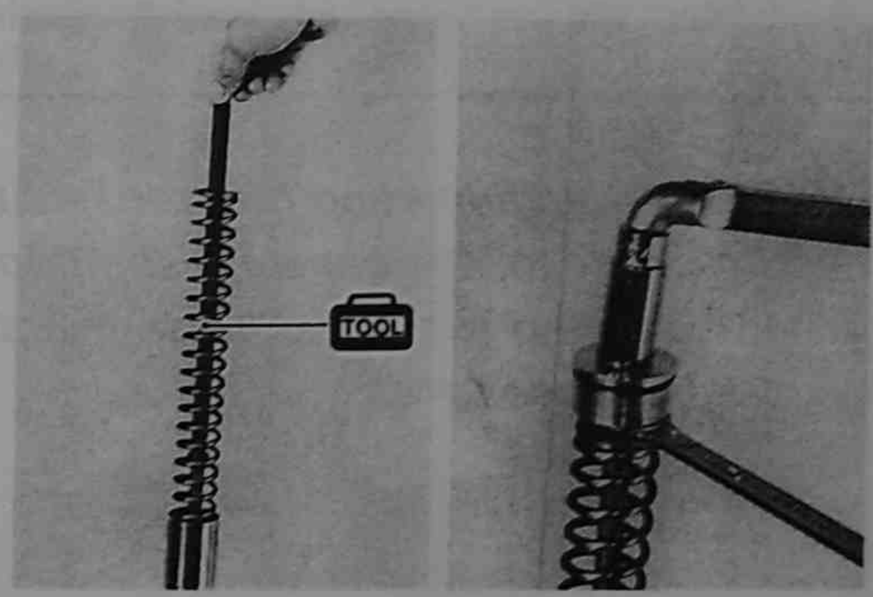

Front Fork Mounting Height Adjustment

- Mount the front forks to the fork brackets.
- Adjust the front fork mounting height from the inner tube top end to the upper bracket top surface, to 10.0 mm (0.39 in, align the upper grooved line of the fork to upper bracket top surface).
- Tighten lower bracket bolts. Tighten fork cap bolts and upper bracket bolts. (☞15-8)

Front Fork Tuning Procedure

Test ride the motorcycle and find out how the front suspension reacts on various types of surface. According to the symptom noticed, adjust the front fork to the best setting for rider and race track conditions. To adjust, attempt changing fork oil capacity and compression/rebound damping following the instructions below.

SYMPTOM	SECTION	ADJUSTMENT PROCEDURE
Feels too hard overall	• Jump • Large bumps • Series of medium bumps	1. Adjust both the compression and rebound damping to a softer setting. 2. Decrease fork oil capacity.
Feels too soft overall and bottoms	• Jump • Large bump • When braking	1. Adjust the compression damping to a stiffer setting. 2. Increase fork oil capacity.
Feels too hard near end of travel	• Jump	1. Decrease fork oil capacity.
Feels too soft near end of travel and bottoms harshly	• Jump • Large bump	1. Adjust the compression damping to a stiffer settting. 2. Increase fork oil capacity.
Feels too hard in the beginning of stroke	• Jump • Large bump • Series of medium bumps • Series of small bumps	1. Adjust the compression damping to a softer setting.
Feels too soft and unstable	• Series of medium bumps • Series of small bumps	1. Adjust the rebound damping to a stiffer setting.
Bounces	• Jump • Large bump	1. Adjust the rebound damping to a stiffer setting.
Bounces	• Series of small bumps	1. Adjust the rebound damping to a softer setting.

NOTE: When adjusting the front fork oil capacity, make sure that the oil level is within the specified range. Also, the capacity should be increased or decreased by 5 mm (Approx. 5 ml) at a time. When adjusting the damping setting, attempt turning the adjuster 1 to 2 click stops at a time for each adjustment.

REAR SUSPENSION

The rear suspension compression and rebound damping force, and spring pre-load are adjustable for rider's preference, rider's weight and course condition.

NOTE: Break-in the rear suspension when riding with a new rear cushion unit. (☞ 1-4)

Compression Damping Force Adjustment

- Turn the adjuster screw clockwise until it stops (full hard position).

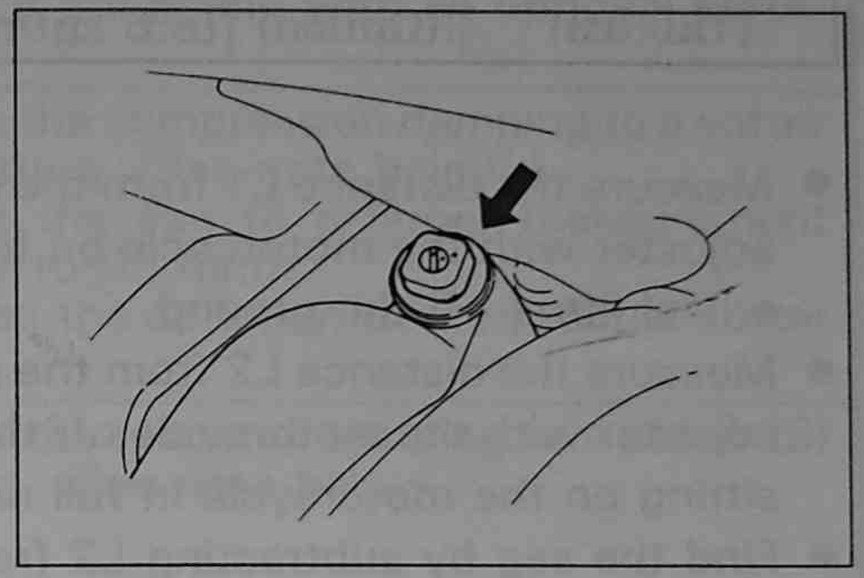

NOTE: To set the adjuster, you must gently turn the adjuster screw clockwise until it stops, then back it out the recommended number of turns. Do not force the adjuster screw past the stopped position, or you may damage the adjuster.

- Turn the adjuster screw counterclockwise and the 16th position is the standard position.

Standard setting: 16th click

Rebound Damping Force Adjustment

- Turn the adjuster screw clockwise until it stops (full hard position).

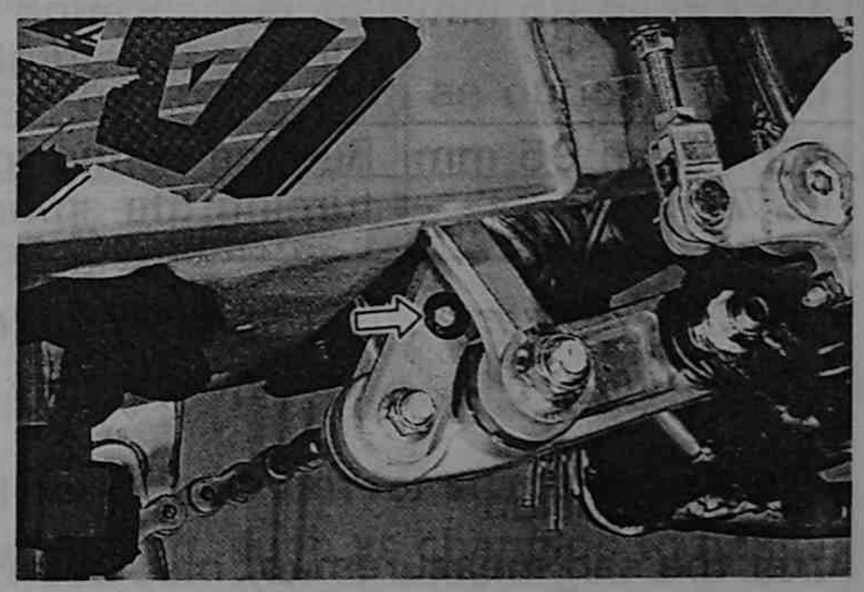

NOTE: To set the adjuster, you must gently turn the adjuster screw clockwise until it stops, then back it out the recommended number of turns. Do not force the adjuster screw past the stopped position, or you may damage the adjuster.

- Turn the adjuster screw counterclockwise and the 12th position is the standard position.

Standard setting: 12th click

Spring Pre-load Adjustment

- Loosen the lock nut. Turning the adjuster without loosening the lock nut can damage the rear cushion unit.
- Turn the adjuster clockwise or counterclockwise to change the spring pre-load.
- Tighten the lock nut.

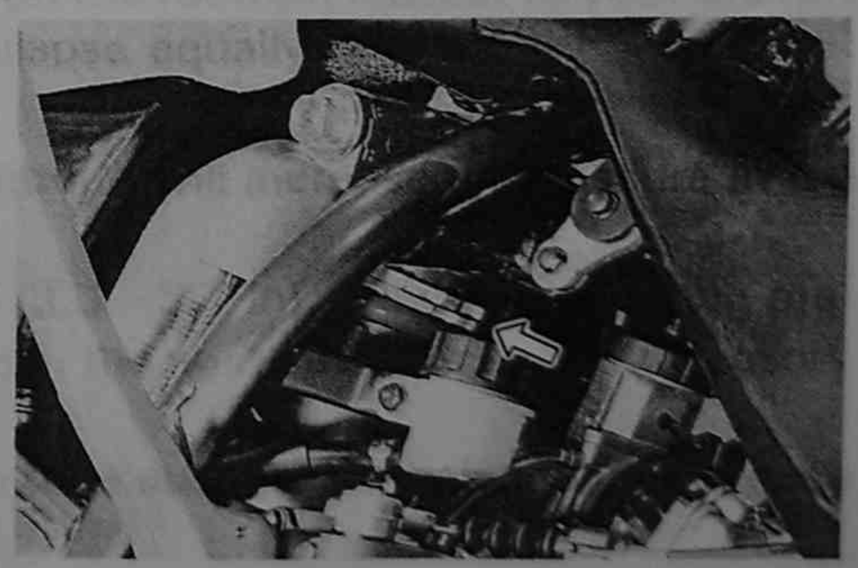

Spring set length Adjustable range: 253.5–267.0 mm (10.0–10.5 in)

Standard spring set length: 263.7 mm (10.4 in)

Rear Suspension Tuning Procedure

- Select the rear suspension according to the rider's weight and preference by referring to the table below.

Rider's weight	Spring	Spring rate	Remarks
Below 52kg (115 lbs)	Soft (Option)	51 N/mm (5.2 kgf/mm)	If you prefer hard setting, use standard spring.
52–68 kg (115–150 lbs)	Standard	53 N/mm (5.4 kgf/mm)	If you prefer hard setting, use hard spring. If you prefer soft setting, use soft spring.
Over 68 kg (150 lbs)	Hard (Option)	55 N/mm (5.6 kgf/mm)	If you prefer soft setting, use standard spring.

- Measure the distance L1 from the seat bolt to the chain adjuster with the motorcycle on the stand and the rear wheel lifted off the ground.
- Measure the distance L2 from the seat bolt to the chain adjuster with the motorcycle off the stand and the rider sitting on the motorcycle in full riding gear.
- Find the sag by subtracting L2 from L1. Standard sag range is 85–95 mm (3.3–3.7 in).

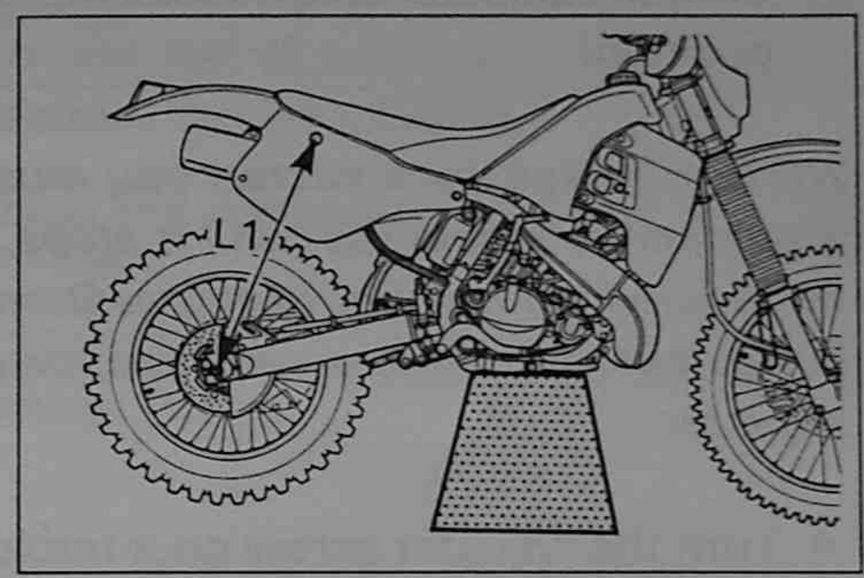

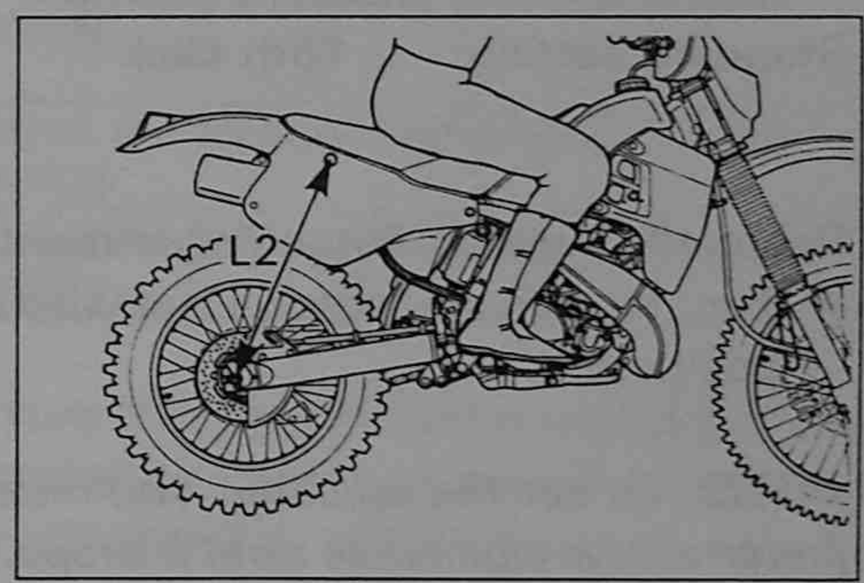

When the sag measured is:	Adjustment procedure
Less than 85 mm (3.3 in)	Increase spring pre-set length by turning the spring adjuster nut.
More than 95 mm (3.7 in)	Reduce spring pre-set length by turning the spring adjuster nut.

NOTE: Two turns of spring adjuster ring varies sag by 8.5 mm (0.3 in).

Rear Suspension

After the sag measurement has been set between 85 mm (3.3 in) to 95 mm (3.7 in), test ride the motorcycle and adjust the suspension for the rider and track conditions referring to the guide below.

SYMPTOM	SECTION	ADJUSTMENT PROCEDURE
Bottoms	• Jump • Large bump	1. Adjust the compression damping to a harder (H) setting. (See note below.) 2. Adjust the sag to a smaller measurement (closer to 85 mm). 3. Replace the spring with an optional stiffer one.
Kicks up	• Medium to large bumps • Small to medium bumps • Decelerating or braking	1. Adjust the rebound damping to a harder (H) setting. (See note below.) 2. Adjust the sag to a larger measurement (closer to 95 mm). 3. Replace the spring with an optional softer one.
Hits bumps too harshly	• Jump • Large bump • Series of medium bumps	1. Adjust the compression damping to a softer (S) setting. (See note below.) 2. Adjust the sag to a larger measurement (closer to 95 mm). 3. Replace the spring with an optional softer one.
Feels harsh and tends to sink	• Series of medium bumps • Series of small bumps	1. Adjust the rebound damping to a softer (S) setting. (See note below.)
Feels too soft and unstable	• Series of medium bumps • Series of small bumps	1. Adjust the rebound damping to a harder (H) setting.
Provides poor traction	• Accelerating • Series of small bumps	1. Adjust the compression and rebound damping to a softer setting, one at a time alternatively until the optimum settings are obtained. 2. Replace the spring with an optional softer one.

NOTE: When adjusting the damping setting, attempt turning the adjuster 1 to 2 click stops at a time for each adjustment.

SUSPENSION BALANCE

Balancing the front to rear suspension properly is the most critical adjustment for suspension performance. If the front forks are adjusted harder than the rear suspension, such as changing to heavier front fork oil, stiffer compression and rebound setting, air pressure build up in the forks and so on, the front forks will collapse less on bumps. This transfers more of the motorcycle and rider weight rearward, possibly causing the rear suspension to bottom, where as it felt fine before the front fork adjustment was made.

Balance Test

Stand next to the motorcycle on level ground. Place one foot on the footrest closest to you. Sharply push down. The front and rear suspensions should both collapse equally.

Balancing Tips

- Check for air pressure build-up in front forks. Heat and altitude will increase air pressure in the front forks.
- Always stay within sag measurement limits, 85—95 mm (3.3—3.7 in), when using spring preset to stiffen or soften rear suspension. If this is not possible, the next stiffer or softer accessory spring is needed.
- The rear shock compression damping can be used to fine tune suspension balance and is easy to access.

ENGINE DISMOUNTING AND MOUNTING

DISMOUNTING

- Remove the seat and frame covers.

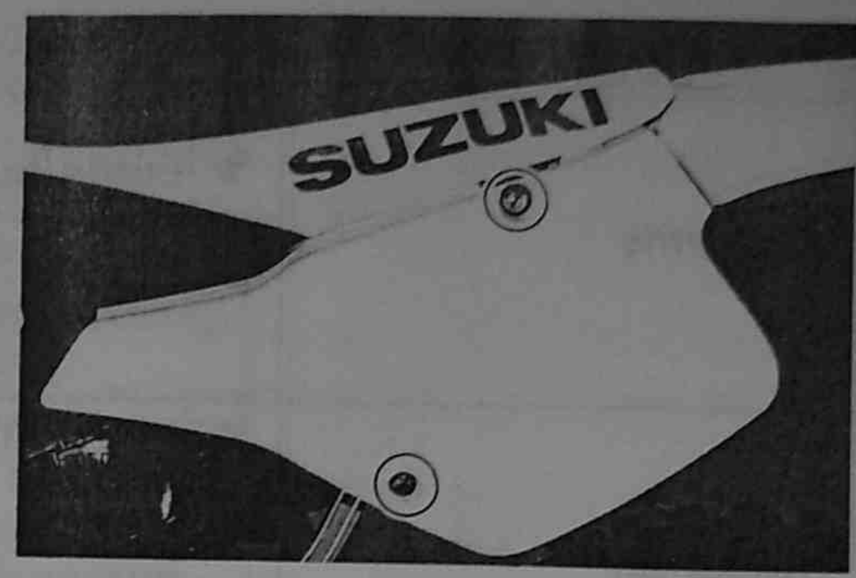

- Remove the radiator cover.
- Turn the fuel valve lever to the ''OFF'' position and disconnect the fuel hose.
- Remove the two bolts and band from the fuel tank.
- Remove the fuel tank.
- Drain transmission oil. (☞ 2-5)
- Drain engine coolant. (☞ 11-2)

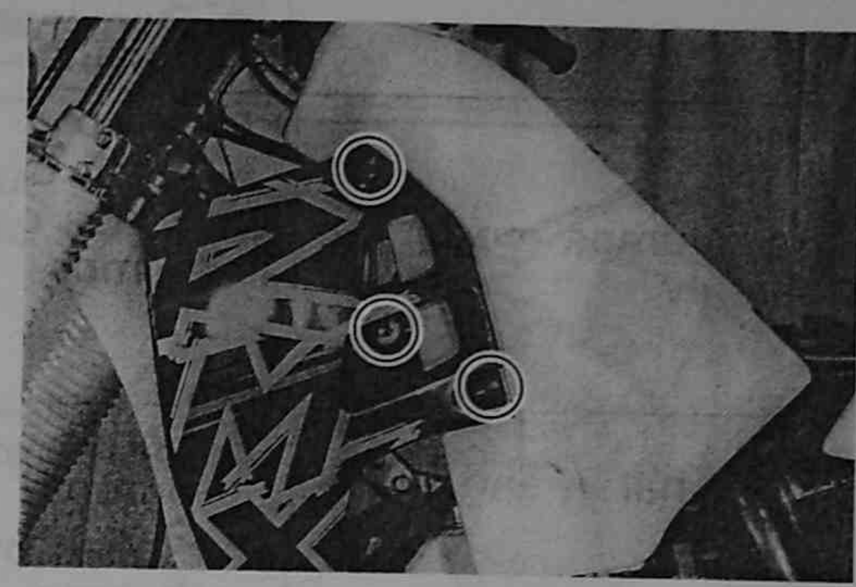

- Remove the exhaust pipe fitting springs and bolts.

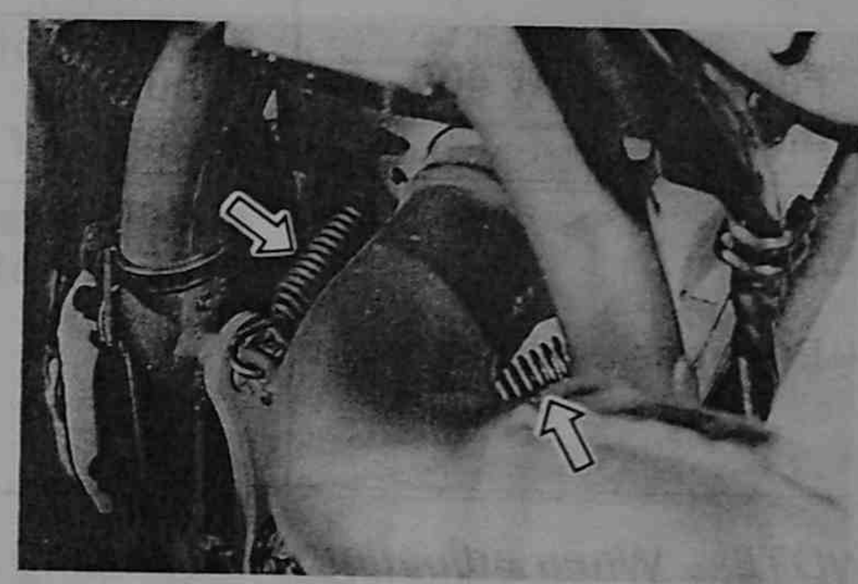

- Remove the muffler fitting bolts.
- Remove the exhaust pipe and muffler.

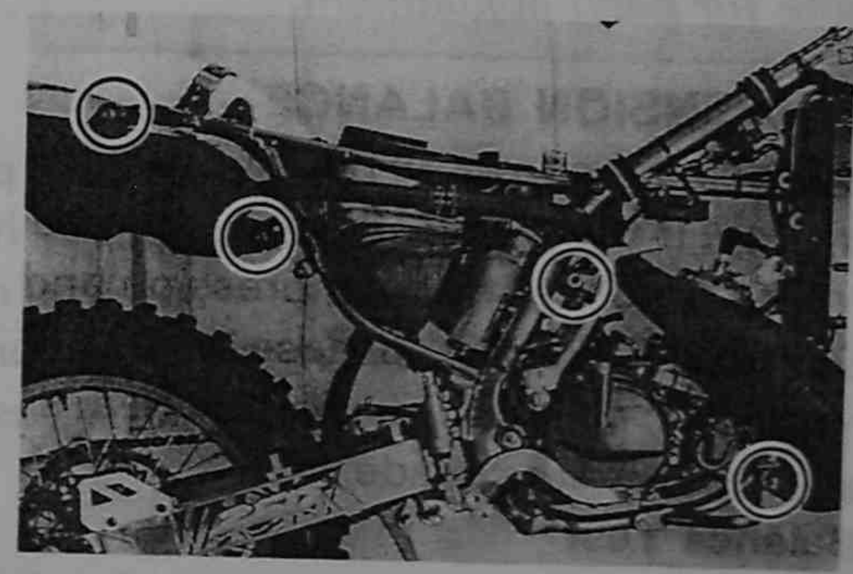

- Disconnect the radiator hoses.
- Disconnect the lead wires.
- Remove the spark plug.
- Remove the carburetor.
- Remove the engine sprocket cover.
- Remove the drive chain.

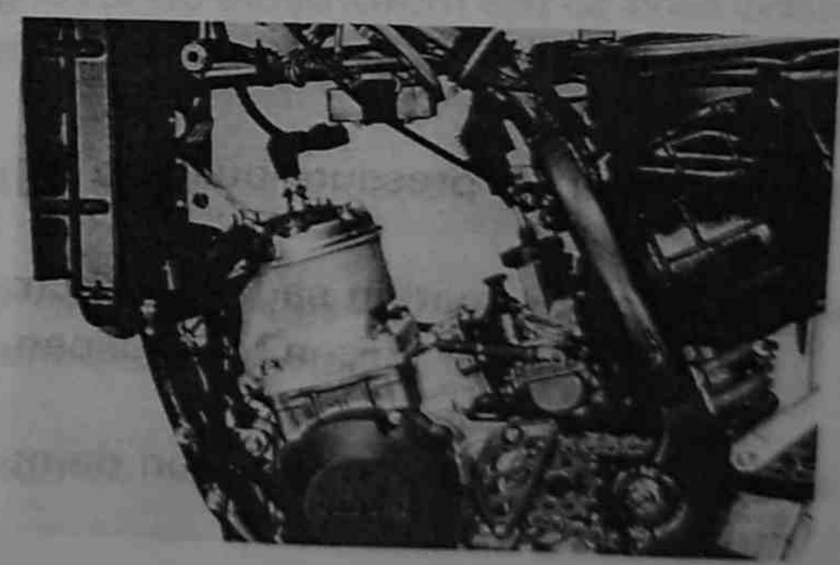

- Remove the clutch release arm.
- Remove the engine mounting bolts and plates.
- Remove the swingarm pivot shaft.

NOTE: The swingarm will come off when the swingarm pivot shaft is completely removed.

- Remove the engine from the frame.

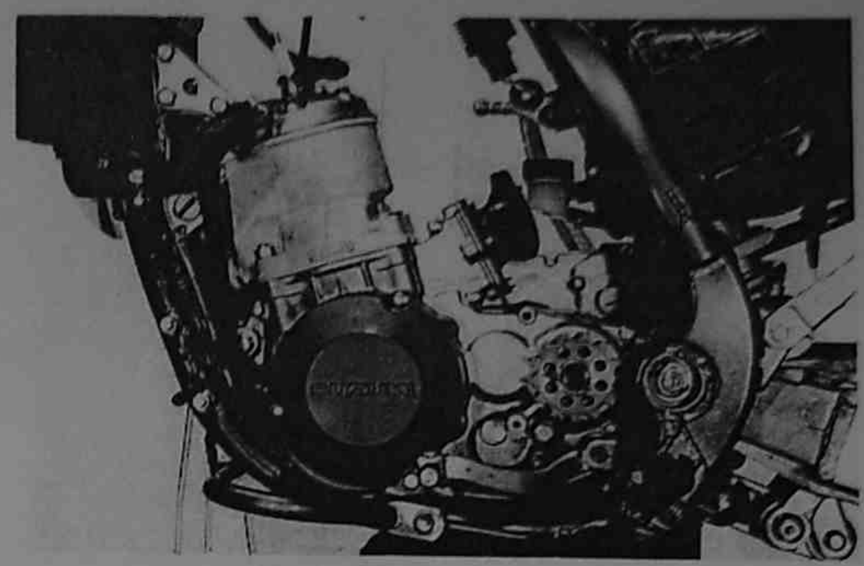

ENGINE MOUNTING

- Mount the engine on the frame.
- Tighten the engine mounting nuts.

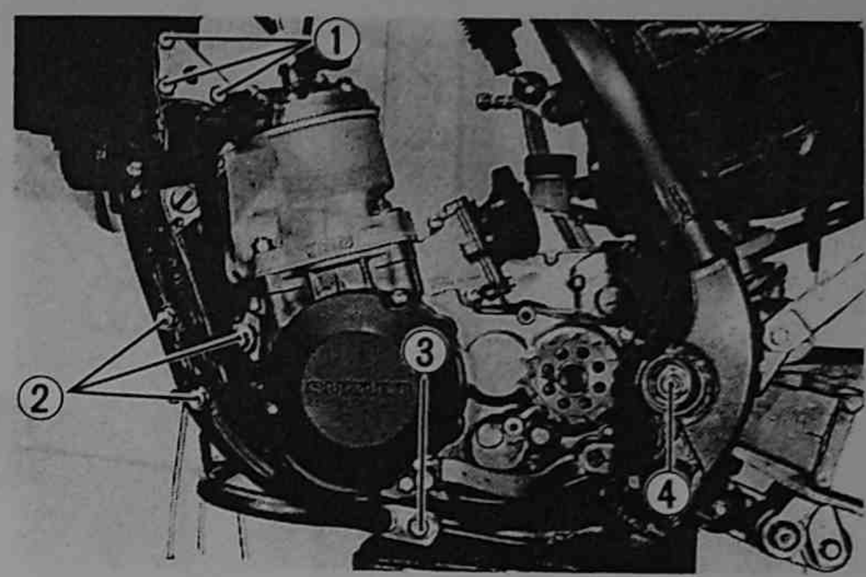

Tightening torque

	N·m	kg-m	lb-ft
①	41	4.1	29.5
②	41	4.1	29.5
③	41	4.1	29.5
④	70	7.0	50.5

NOTE: Replace the self-locking nuts with new ones.

Reassemble the parts in the reverse order of removal.

NOTE: Route the cables and lead wires correctly.
(☞ 19-1)

After mounting the engine, inspect the following items.

- Transmission oil level (☞ 2-5)
- Coolant level (☞ 2-5)
- Throttle cable play (☞ 2-7)
- Clutch lever play (☞ 2-7)
- Drive chain slack (☞ 2-8)

CYLINDER, PISTON AND EXHAUST VALVE

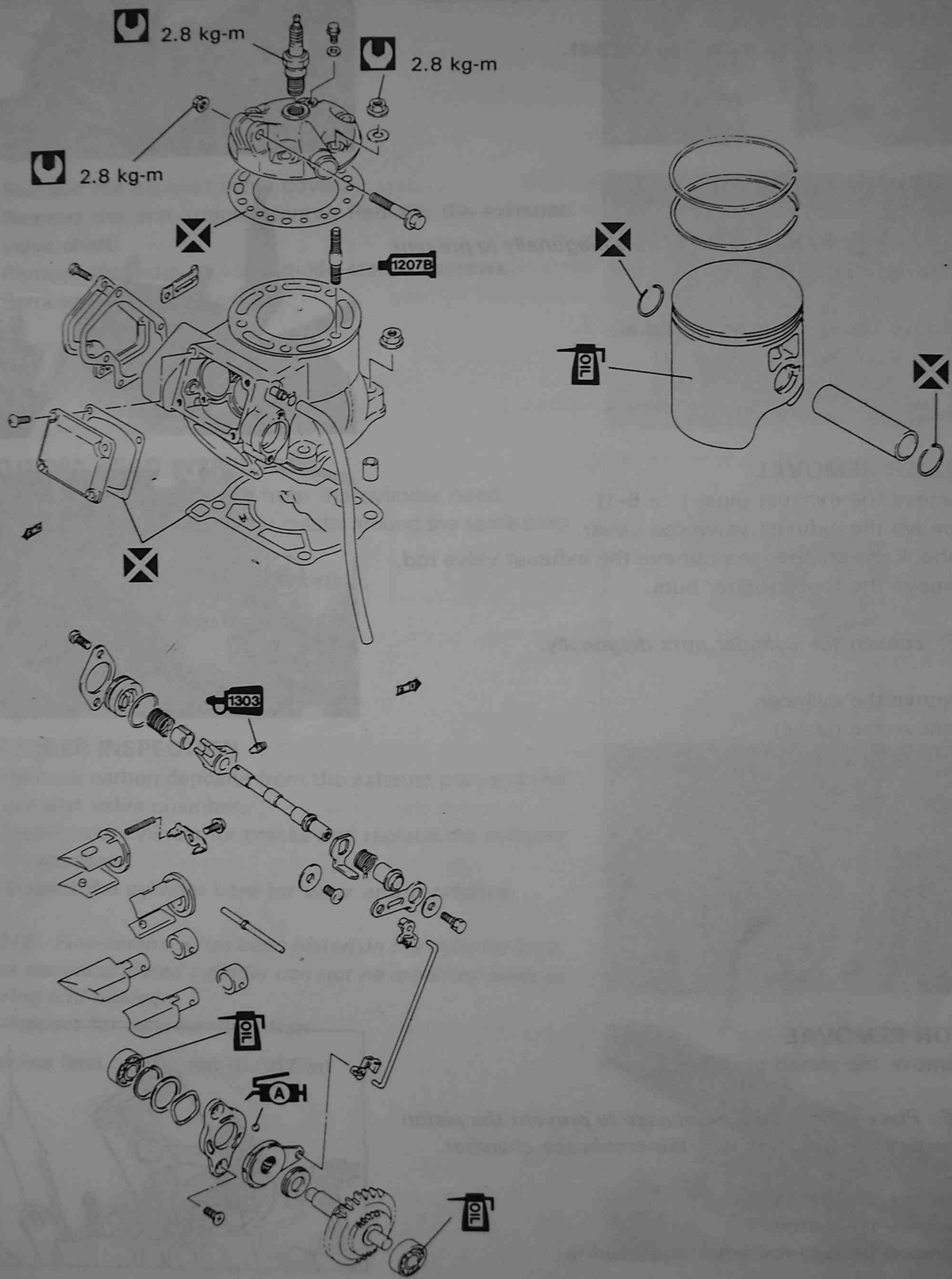

CYLINDER HEAD REMOVAL

- Remove the fuel tank.
- Drain engine coolant. (☞ 11-2)
- Loosen the clamp and disconnect the radiator hose.
- Remove the spark plug.
- Remove the engine mounting bracket.

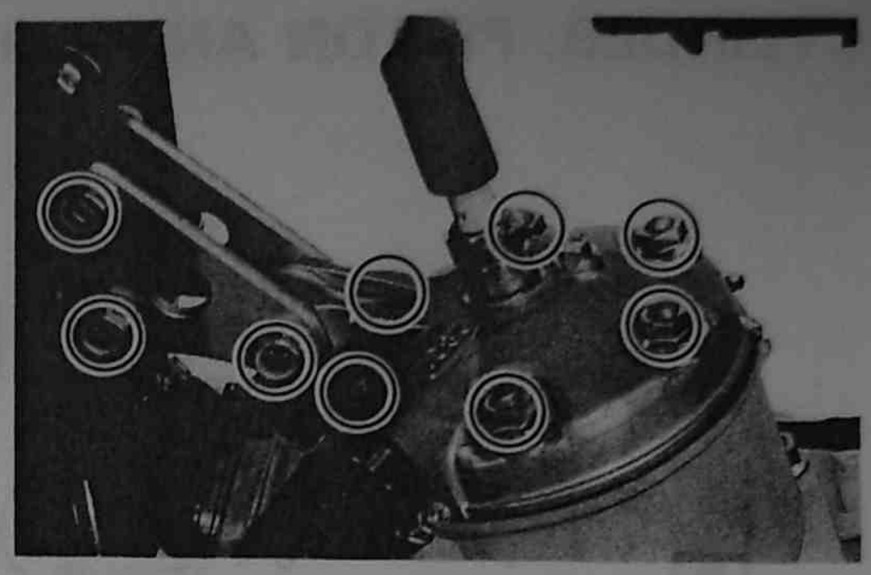

- Remove the cylinder head.

NOTE: Loosen the cylinder head nuts diagonally to prevent cylinder head distortion.

- Remove the cylinder head gasket.

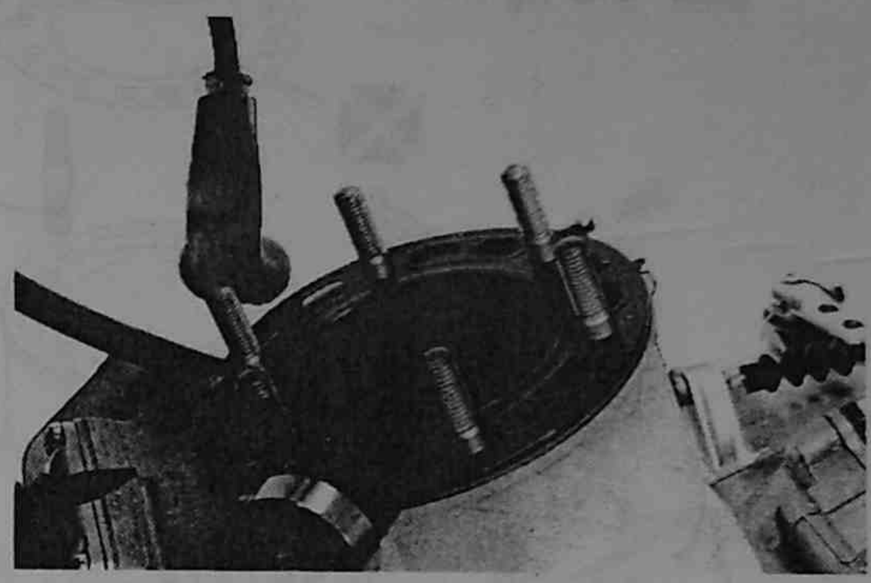

CYLINDER REMOVAL

- Remove the exhaust pipe. (☞ 5-1)
- Remove the exhaust valve rod cover.
- Unhook the stopper and remove the exhaust valve rod.
- Remove the four cylinder nuts.

NOTE: Loosen the cylinder nuts diagonally.

- Remove the cylinder.
- Remove the gasket.

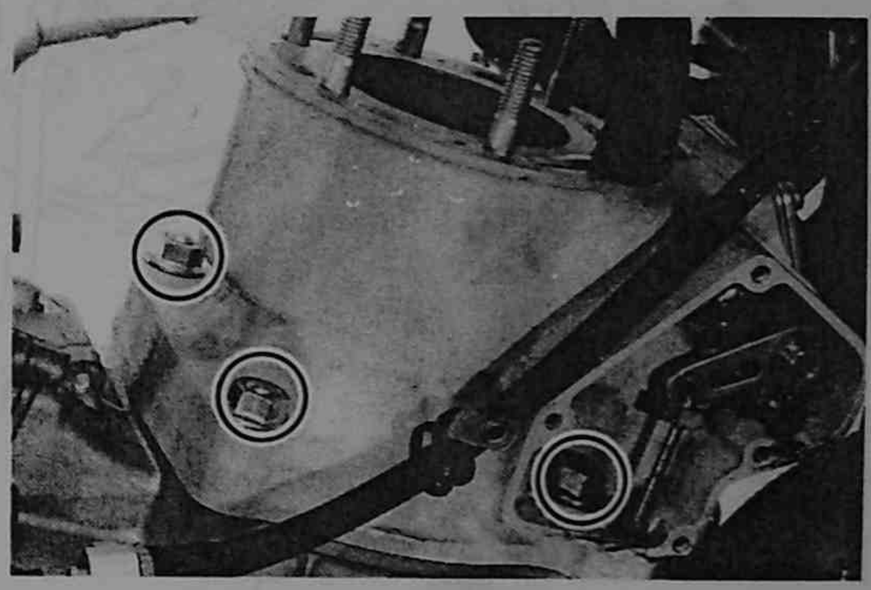

PISTON REMOVAL

- Remove the piston pin circlip.

NOTE: Place cloth on the crankcase to prevent the piston pin circlip from dropping into the crankcase chamber.

- Remove the piston pin.
- Remove the piston.
- Remove the con-rod small end bearing.

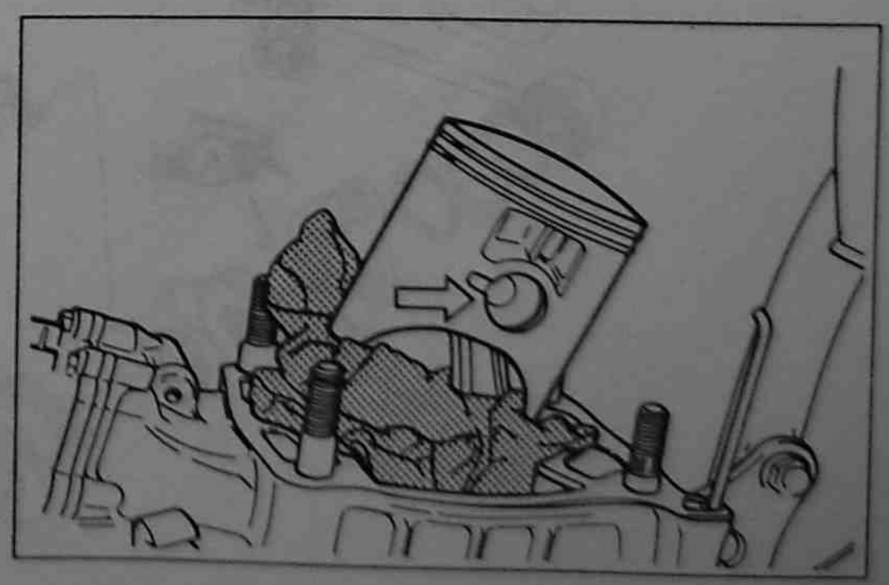

EXHAUST VALVE REMOVAL

- Remove two screws and retainer.
- Remove the exhaust valve cap, spring and spacer.
- Remove the exhaust valve shaft stopper screw.

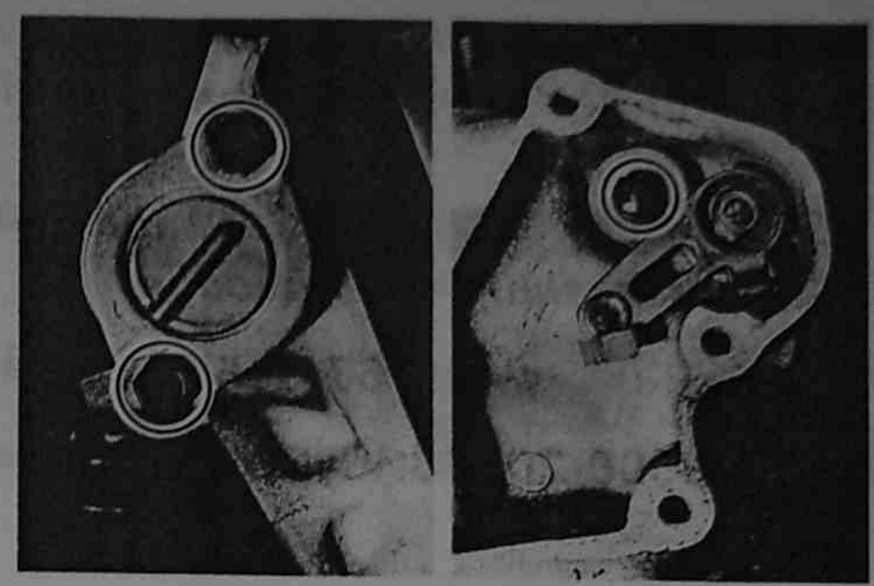

- Remove the exhaust valve cover.
- Remove the arm stopper screw. Remove the exhaust valve shaft.
- Remove the exhaust valve guide stopper screws.
- Remove the exhaust valves.

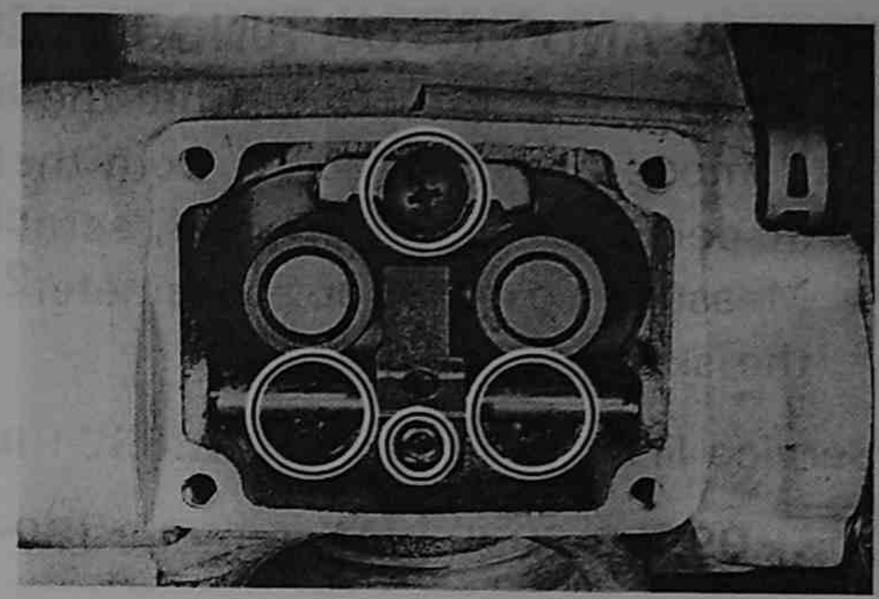

CYLINDER HEAD INSPECTION

- Remove carbon deposits from the cylinder head.
- Inspect the cylinder head for cracks around the spark plug hole.
- Inspect for cylinder head distortion.

Service limit : 0.05 mm (0.002 in)

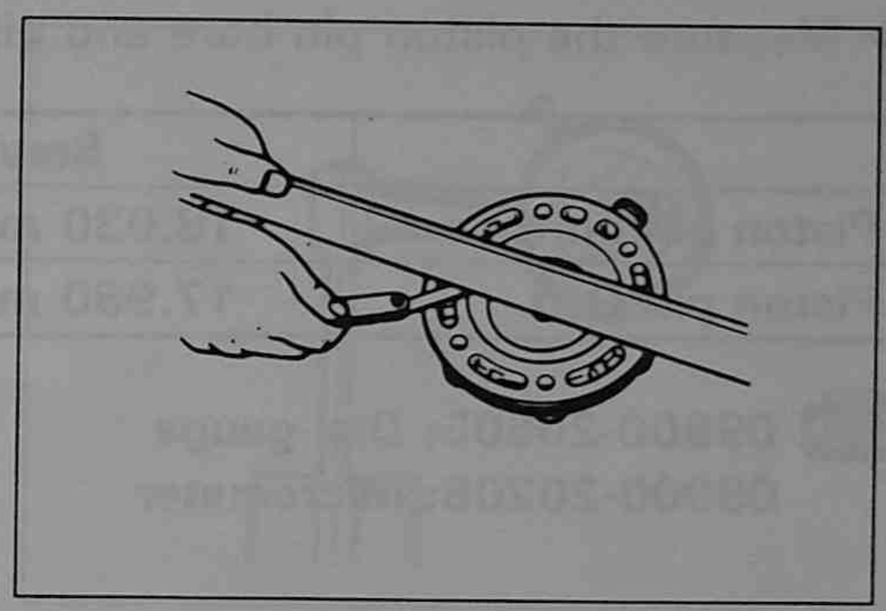

CYLINDER INSPECTION

- Remove carbon deposits from the exhaust port and the exhaust valve chamber.
- Inspect the cylinder for cracks and replace the cylinder if necessary.
- Inspect the cylinder bore for wear and scratches.

NOTE: Fine-ceramics has been plated on the cylinder bore. Fine-ceramics plated cylinder can not be modified such as boring and honing.

- Inspect for cylinder distortion.

Service limit : 0.05 mm (0.002 in)

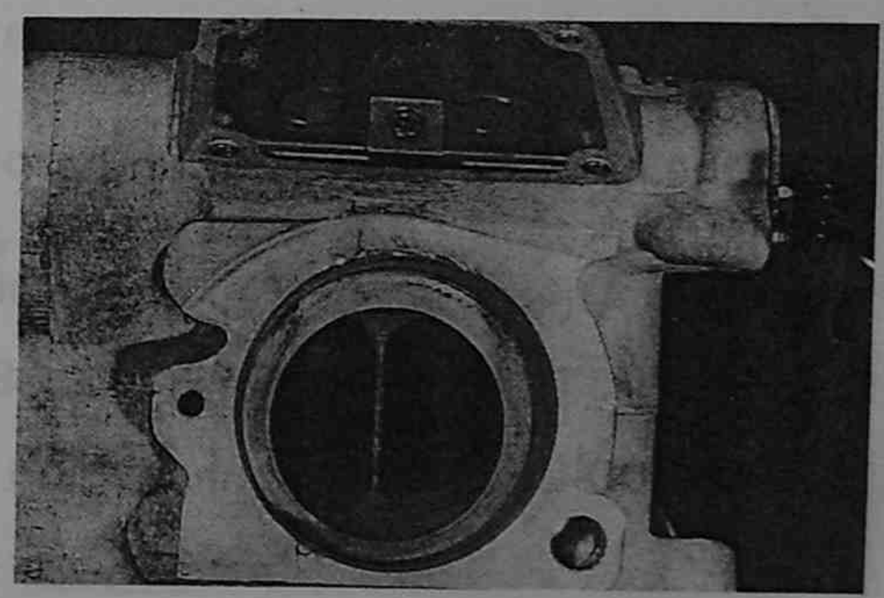

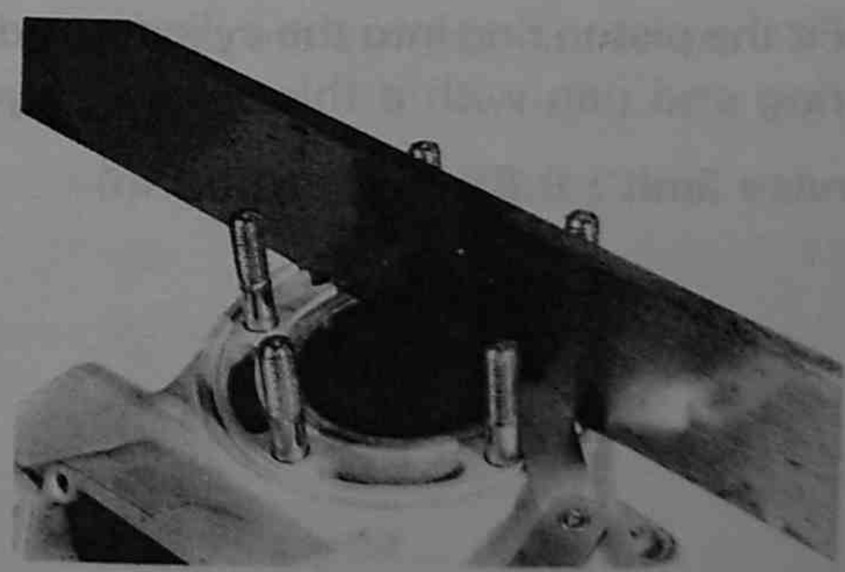

- Measure the cylinder bore for wear with a cylinder gauge 20 mm (0.79 in) from the top surface.

NOTE: The cylinder bore must be measured perpendicular to the crankshaft axis direction.

Standard : 67.000–67.015 mm (2.6378–2.6384 in)

TOOL 09900-20508: Cylinder gauge set (40–80 mm)

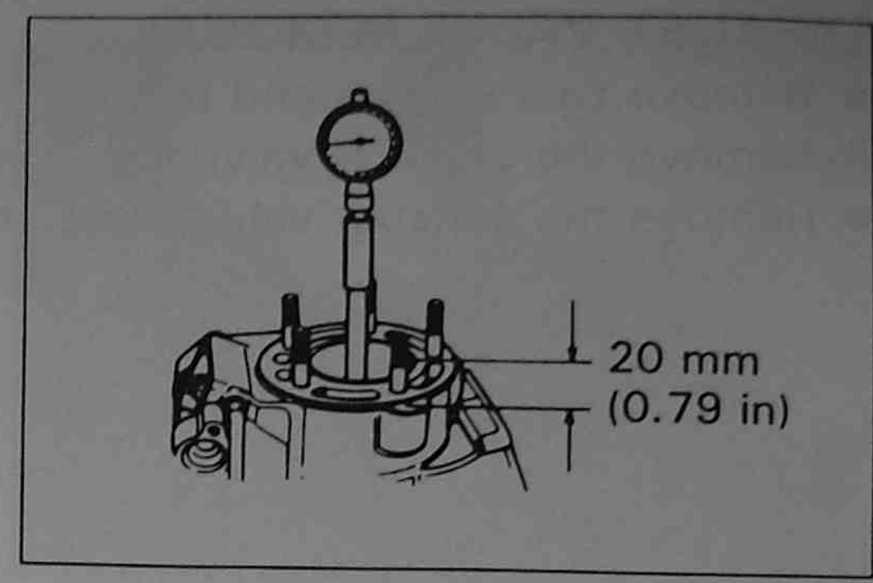

PISTON AND PISTON RING INSPECTION

- Remove the piston ring from the piston ring groove.
- Remove carbon deposits from the piston.
- Inspect the piston for wear, scratches and damage.
- Measure the piston outer diameter 24 mm (0.94 in) from the skirt end.

Service limit : 66.880 mm (2.6331 in)

TOOL 09900-20203: Micrometer (50–75 mm)

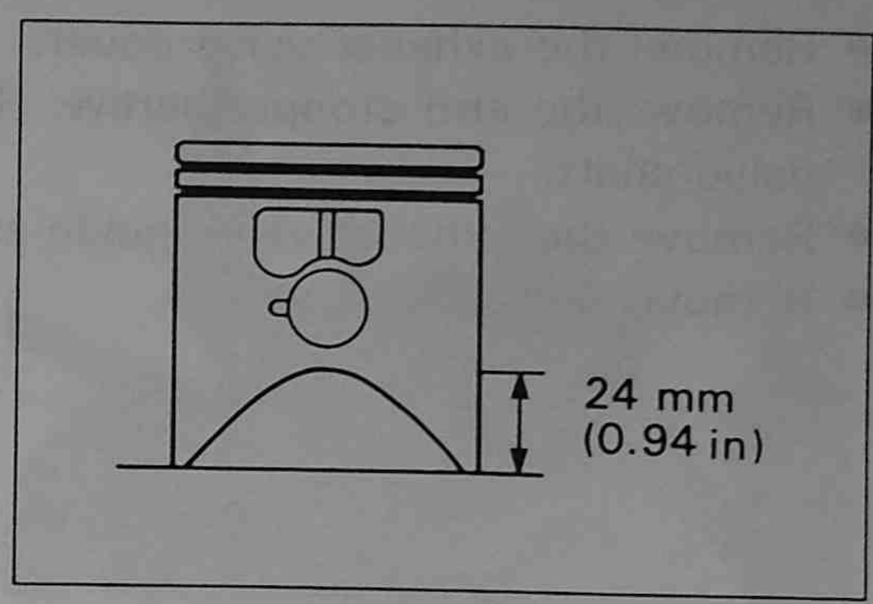

- Measure the piston pin bore and piston pin diameter.

	Service Limit
Piston pin bore	18.030 mm (0.7098 in)
Piston pin O.D.	17.980 mm (0.7079 in)

TOOL 09900-20605: Dial gauge
09900-20205: Micrometer

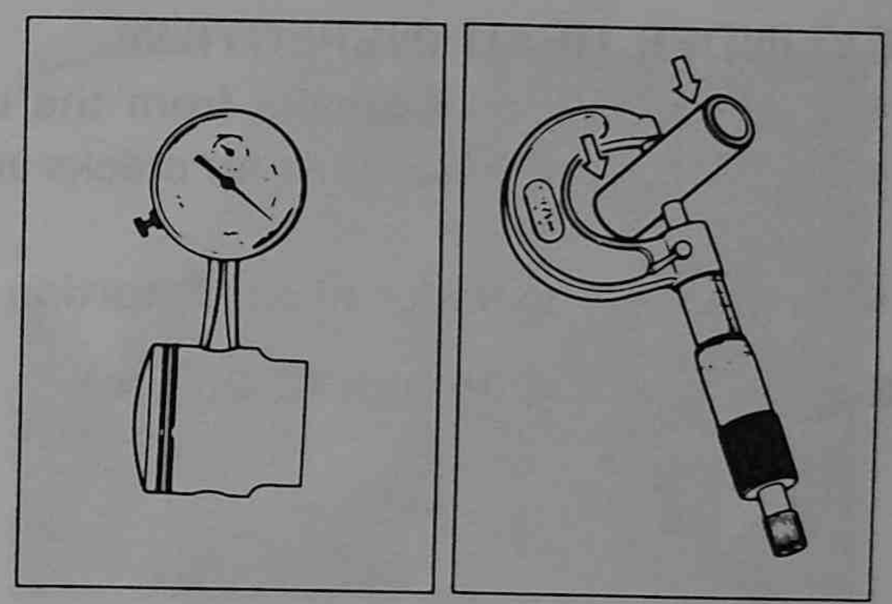

- Remove carbon deposits from piston ring and piston ring groove.
- Fit the piston ring into the ring groove as shown in the illustration.
- Measure the clearance Ⓐ with a thickness gauge.

Standard : 0.020–0.060 mm (0.0008–0.0024 in)

TOOL 09900-20803: Thickness gauge

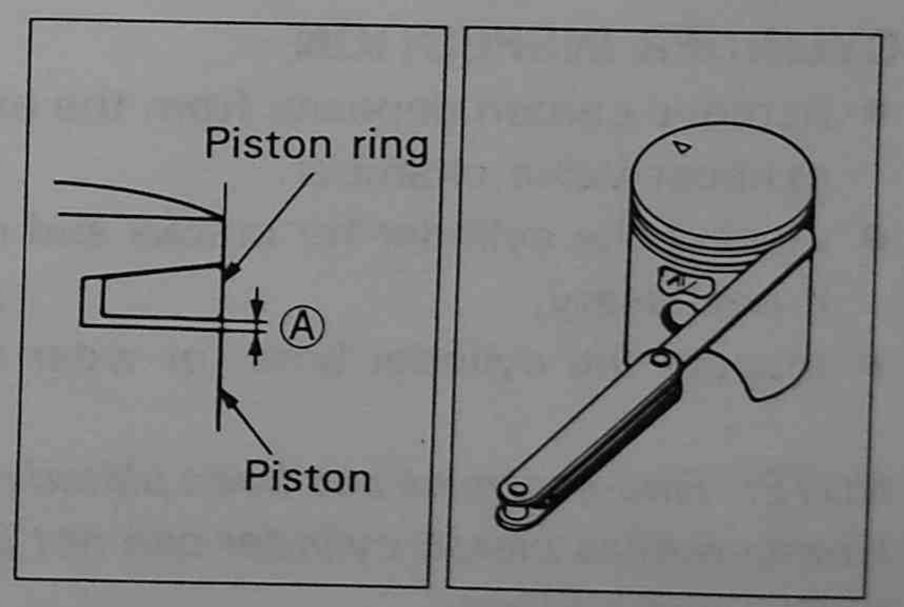

- Fit the piston ring into the cylinder and measure the piston ring end gap with a thickness gauge.

Service limit : 0.85 mm (0.033 in)

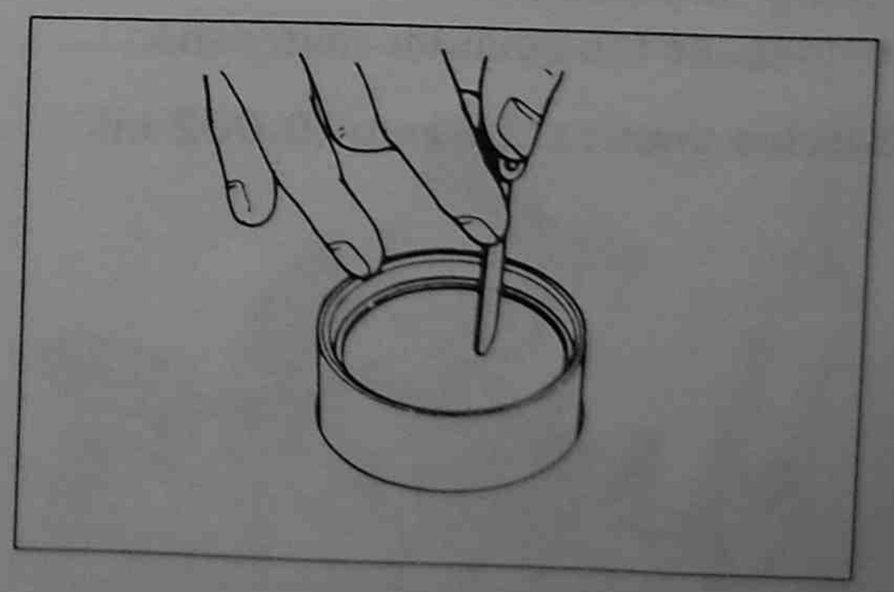

EXHAUST VALVE INSPECTION

- Remove carbon deposits from the exhaust valve and valve guide.
- Inspect the exhaust valve and valve guide for wear and scratches.

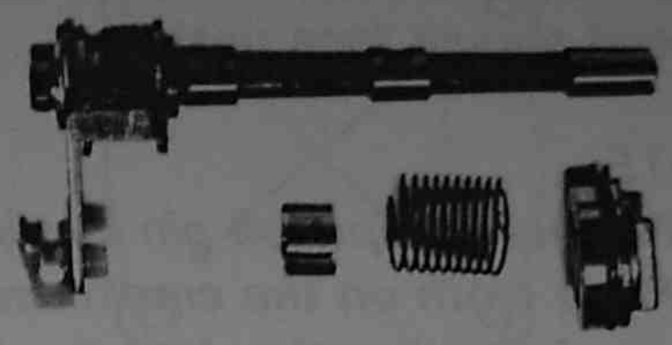

- Inspect the return spring for spring tension.
- Inspect the spacer for cracks and wear.

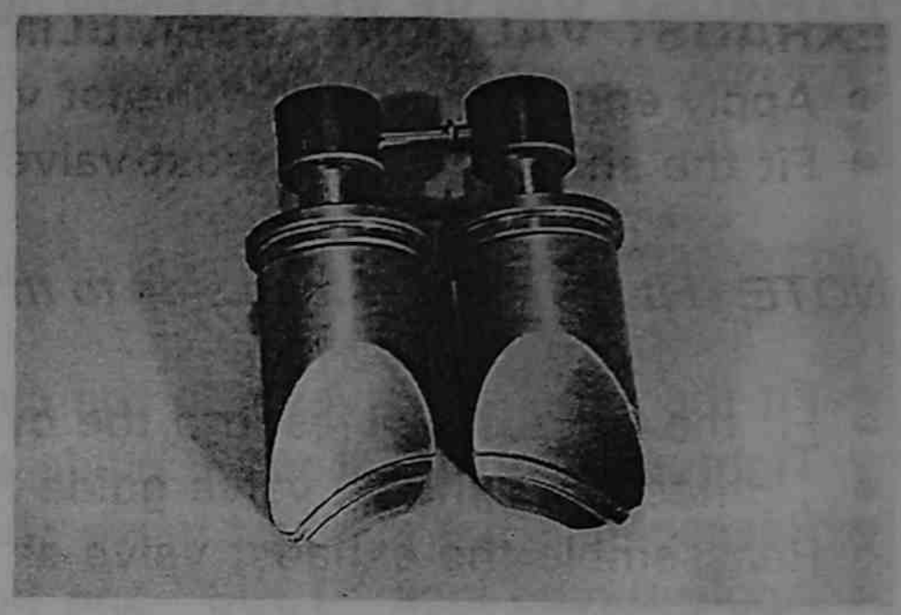

CONROD INSPECTION

- Measure the conrod small end bore.

Service limit : 23.040 mm (0.9071 in)

TOOL 09900-20605: Dial gauge

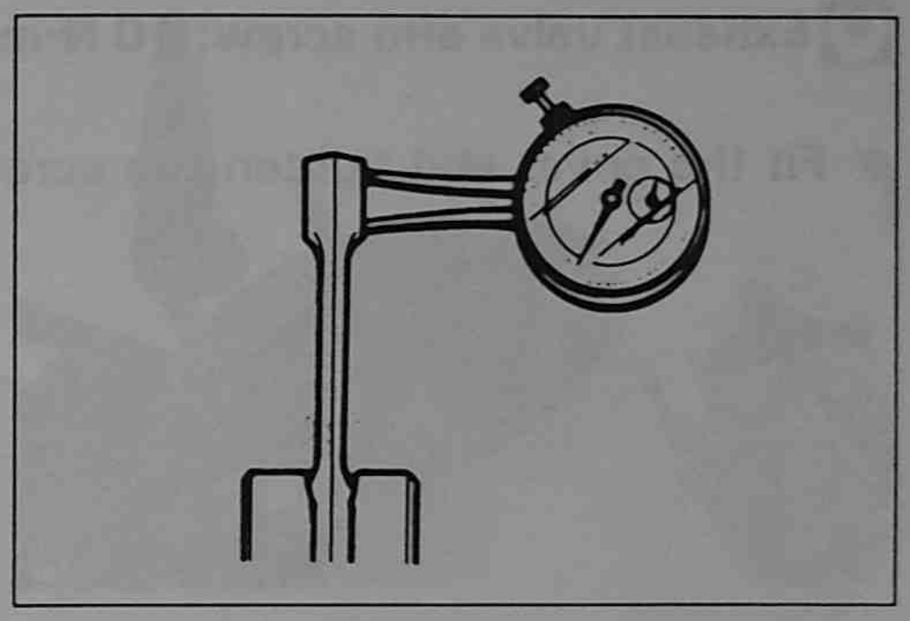

- Fit the piston pin and bearing into the conrod small end and check the play.

PISTON RING AND PISTON REASSEMBLING

- Apply engine oil to the piston ring and piston ring groove.
- Fit the piston ring into the piston ring groove so the piston ring end comes to the piston ring locating pin.
- Apply engine oil to the piston pin and bearing.
- Fit the bearing to the conrod small end.

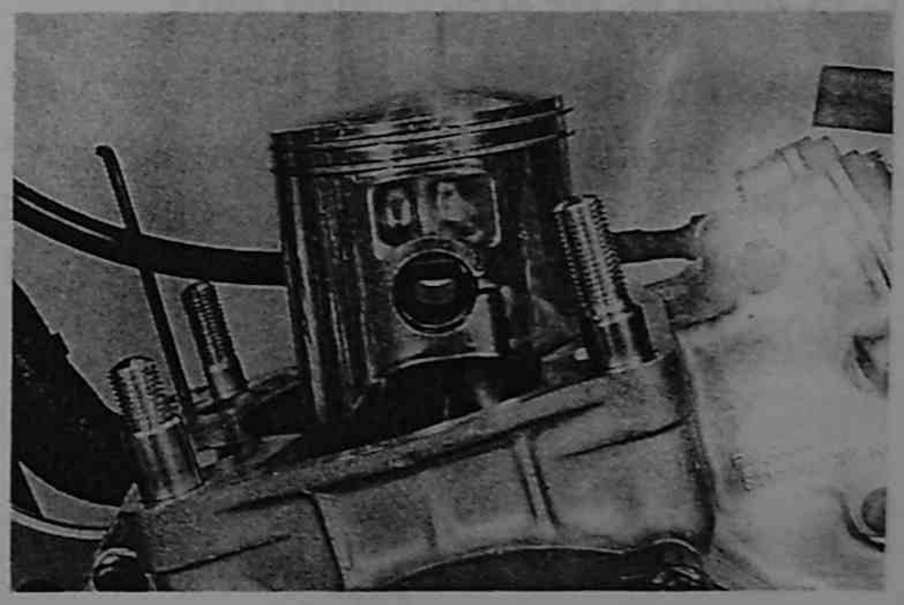

- Face the arrow mark on the piston top to the exhaust port side and fit the piston.
- Fit the piston pin and piston pin circlip. Piston pin circlip end should face upside.

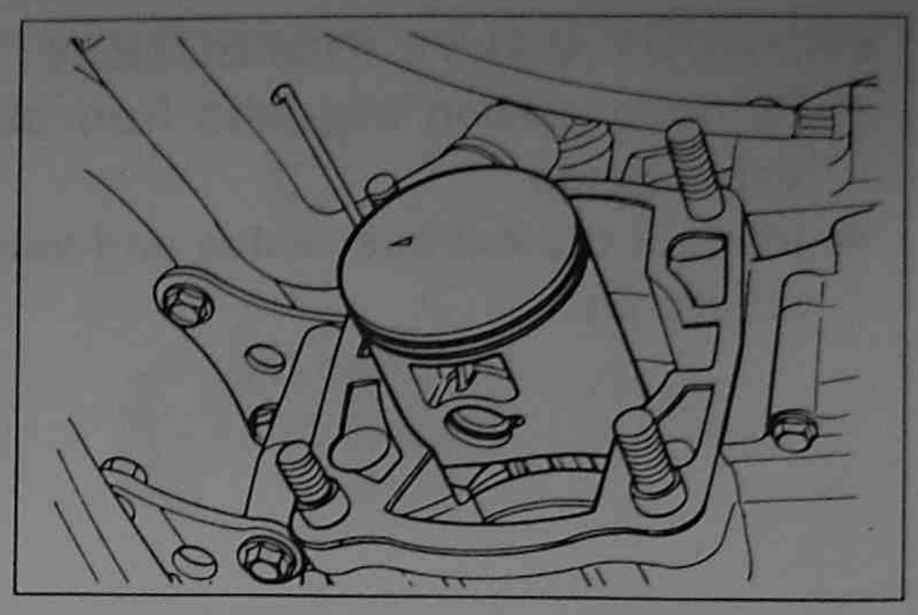

NOTE:
- *Replace the piston pin circlip with a new one.*
- *Place cloth on the crankcase to prevent piston pin circlip from dropping into the crankcase chamber.*

EXHAUST VALVE REASSEMBLING

- Apply engine oil to the exhaust valve and valve guide.
- Fit the shaft to the exhaust valves.

NOTE: Fit the shaft of long side to the right exhaust valve.

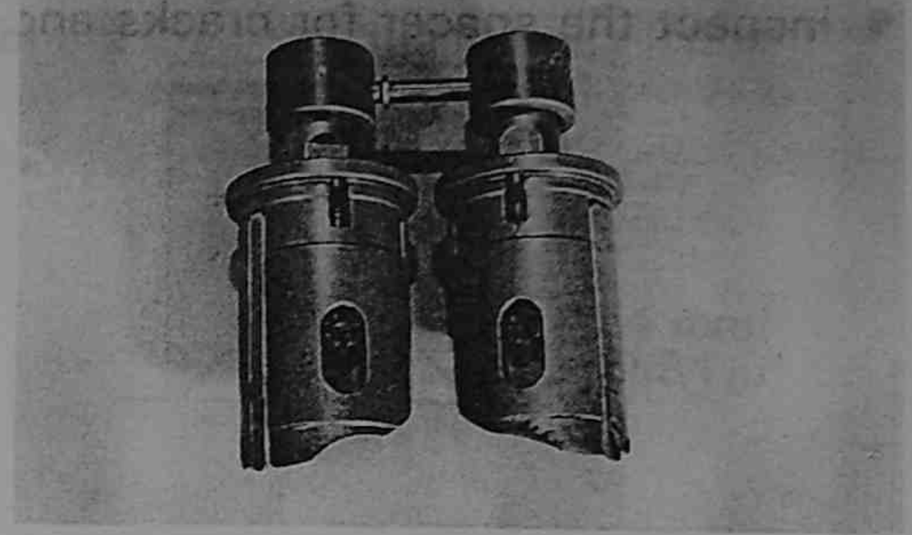

- Fit the exhaust valves into the cylinder.
- Tighten the exhaust valve guide stopper screws.
- Reassemble the exhaust valve shaft and arm stopper.
- Apply thread lock "1303" and tighten the screw.

Exhaust valve arm screw: 10 N·m (1.0 kg-m, 7.0 lb-ft)

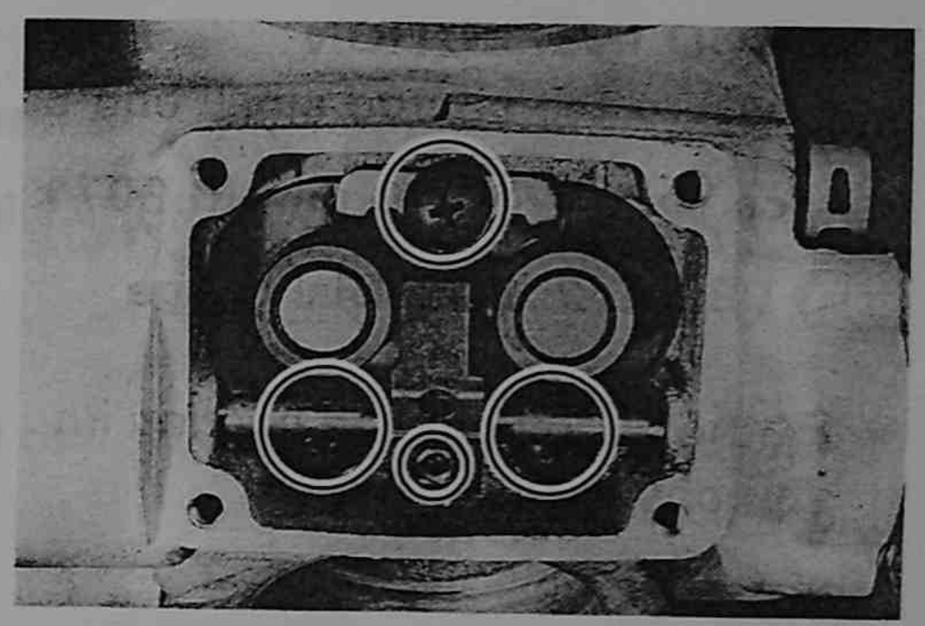

- Fit the cover and tighten the screws.

CYLINDER REASSEMBLING

- Fit the new gasket. Fit the dowel pins.
- Move the piston to the top dead center.
- Apply engine oil to the cylinder bore.
- Hold the piston and piston ring, and insert the piston into the cylinder.

⚠ CAUTION

If the piston pin end is not at the proper position, you can not insert the piston into the cylinder properly and the piston ring will be damaged.

Locate the piston ring end to the locating pin and insert the piston into the cylinder.

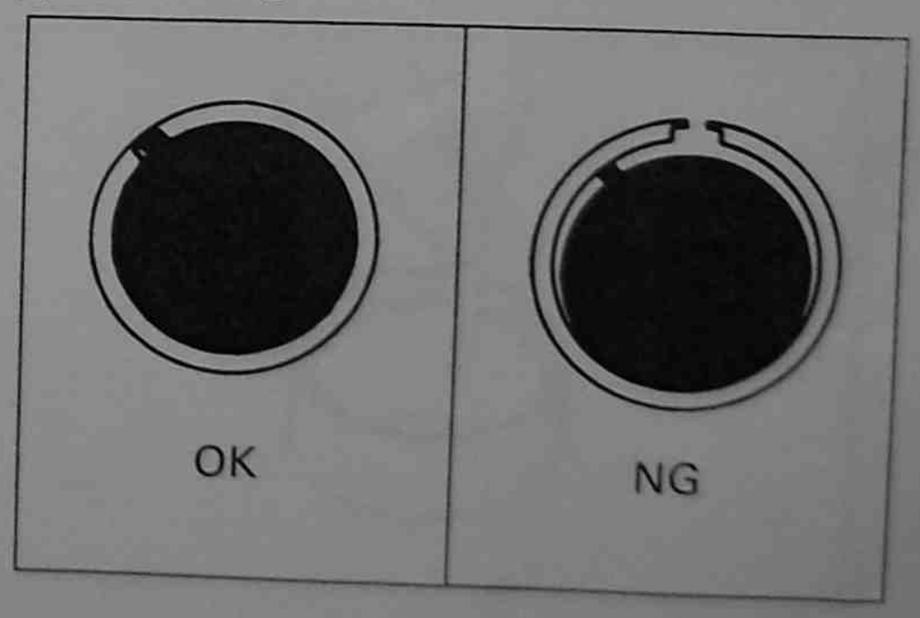

- Tighten the cylinder nuts to the specified torque according to the specified tightening order as shown.

Cylinder nuts: 38 N·m (3.8 kg-m, 27.5 lb-ft)

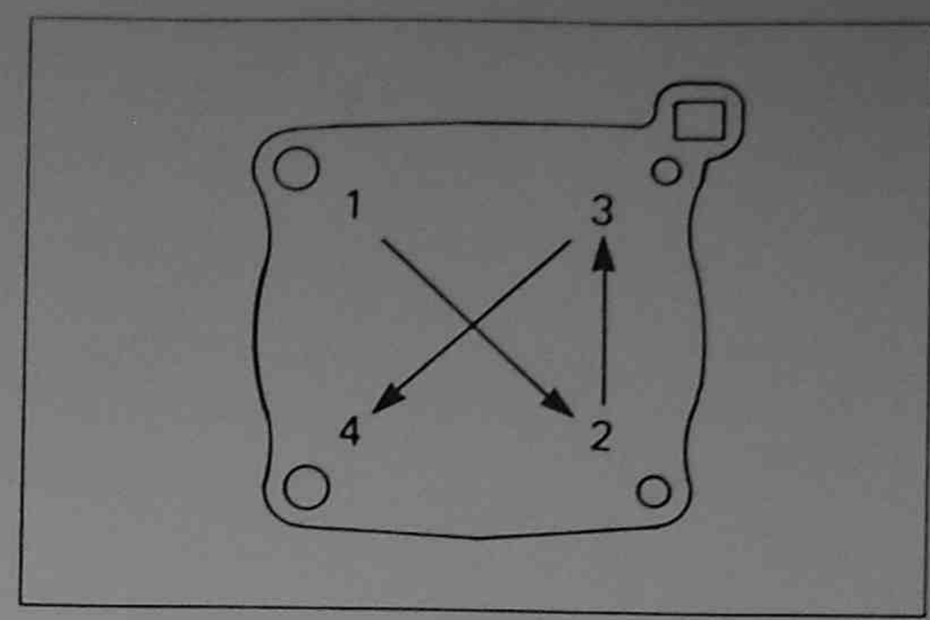

- Fit the exhaust valve rod.
- Install the spacer, spring cap, exhaust valve cap retainer.
- Tighten the screws temporarily.
- Turn the exhaust valve cap 360° clockwise.
- Tighten the screws.
- Inspect the exhaust valves for smooth movement.

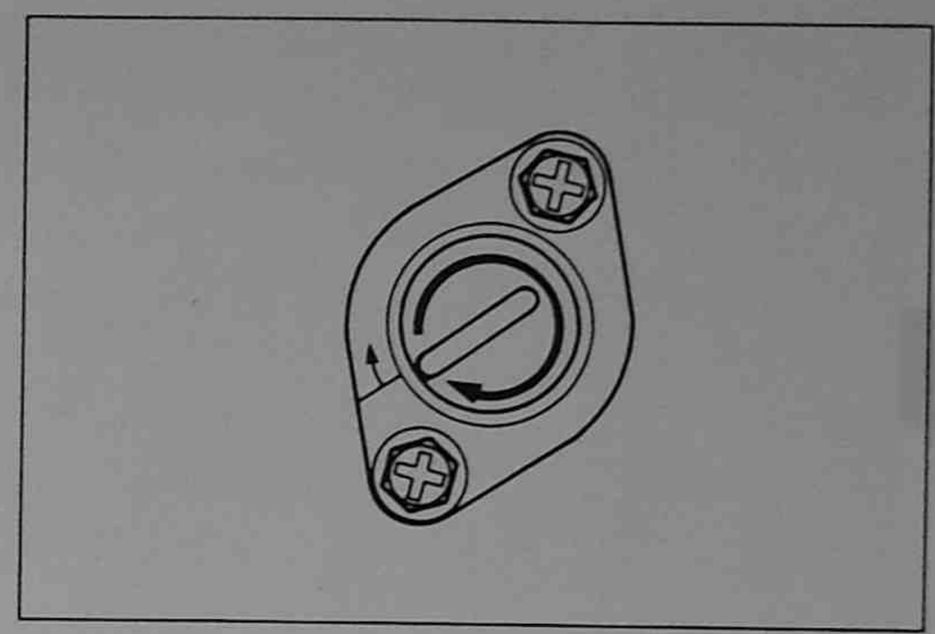

- Install the new gasket.
- Install the cylinder head.

NOTE: Apply Bond "1207B" to the stud bolt threads when assembling the removed stud bolts into the cylinder.

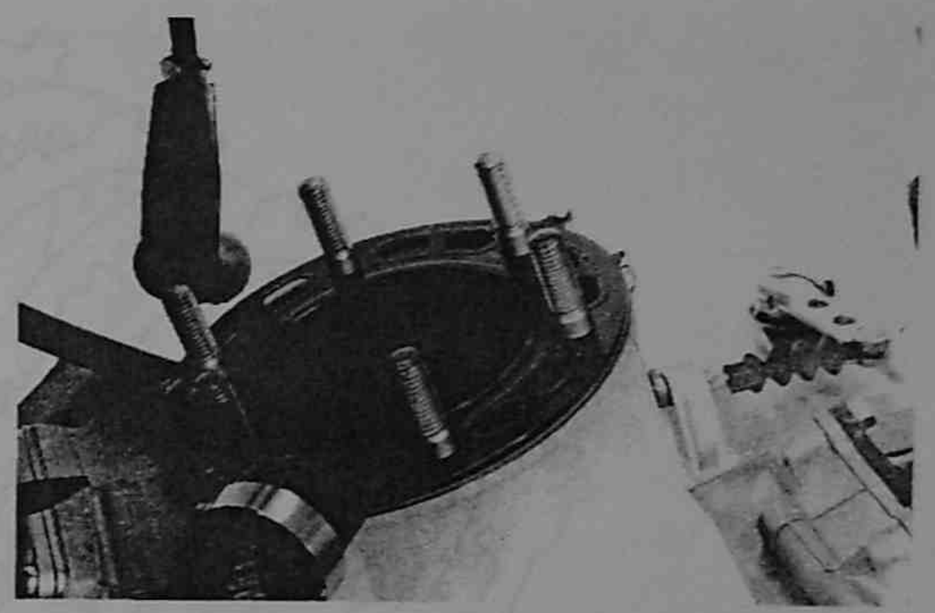

- Tighten the cylinder head nuts to the speicfied torque according to the specified tightening order as shown.

Cylinder head nuts: 28 N·m (2.8 kg-m, 20.0 lb-ft)

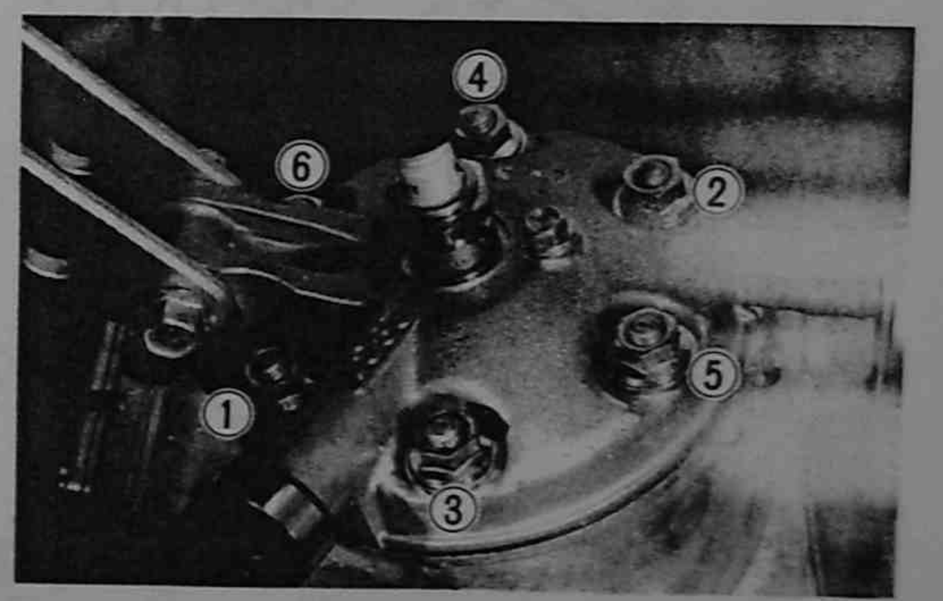

- Reassemble the engine mounting bracket. (☞ 5-2)
- Reassemble the spark plug and spark plug cap.
- Connect the radiator hose and tighten the clamps.
- Pour coolant.(☞ 2-5)
- Inspect coolant leak.

CLUTCH

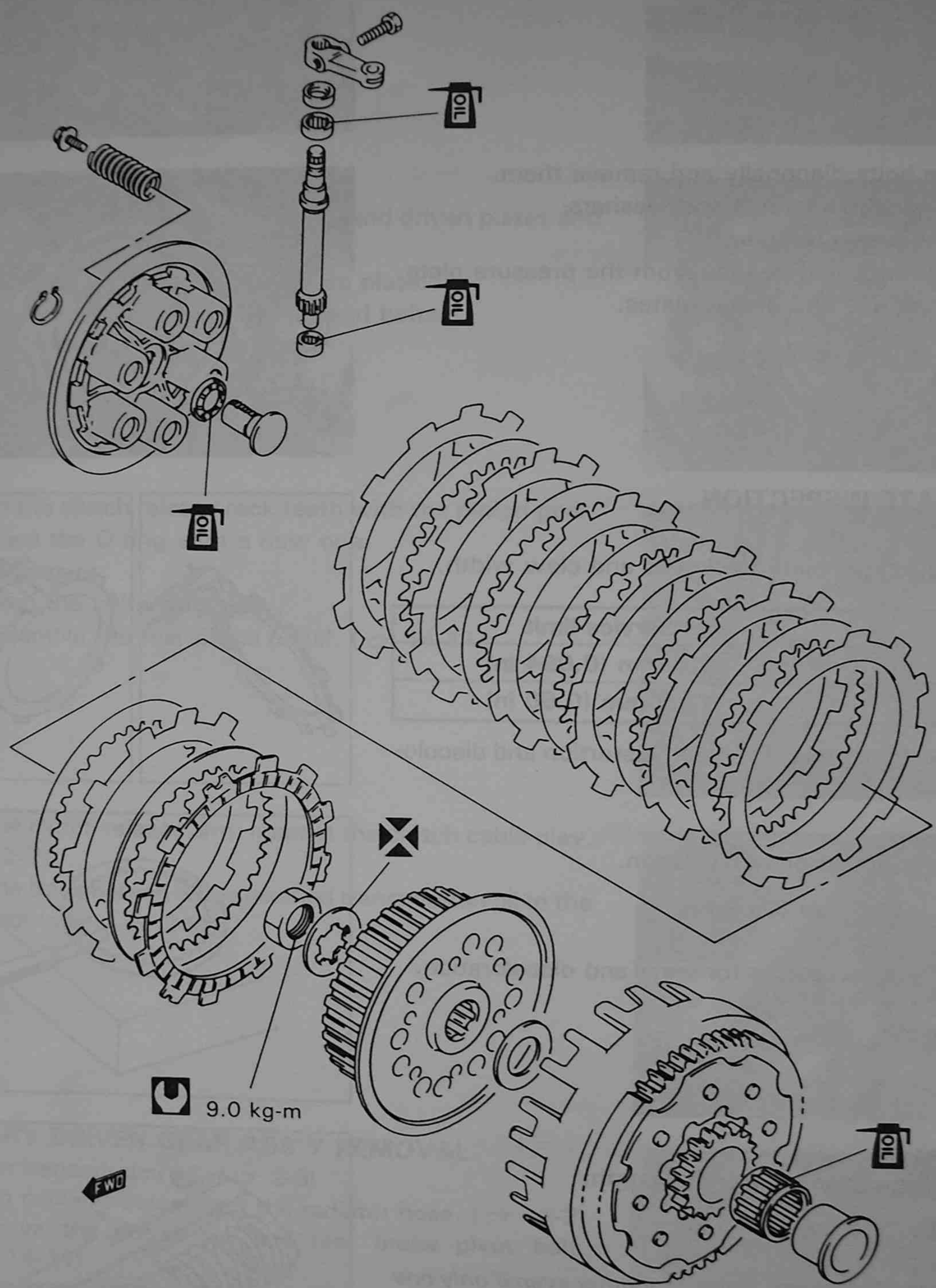

CLUTCH PLATE REMOVAL

- Drain transmission oil. (☞ 2-5)
- Remove the cotter pin and rear brake pedal. (☞14-11)
- Remove the clutch release arm.
- Remove the clutch cover bolts.

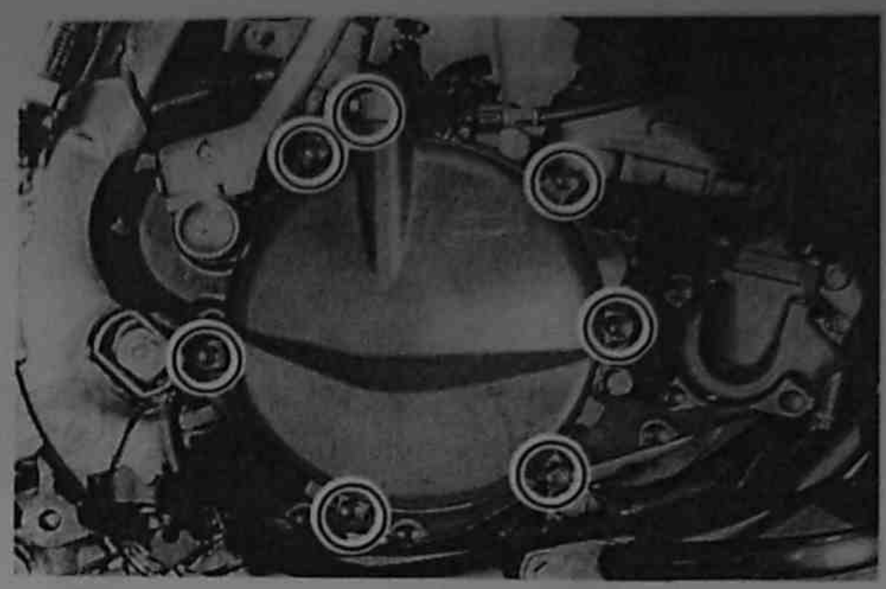

- Loosen the bolts diagonally and remove them.
- Remove the clutch springs and washers.
- Remove the pressure plate.
- Remove the rack and bearing from the pressure plate.
- Remove the drive and driven plates.

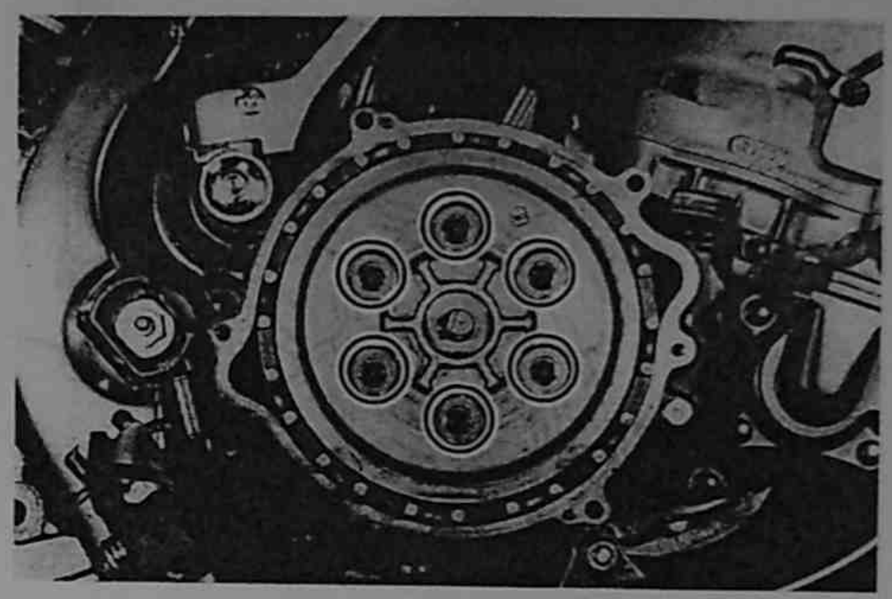

CLUTCH PLATE INSPECTION

Drive Plate

- Measure the drive plate thickness and claw width.

	Service limit
Thickness	2.4 mm (0.094 in)
Claw width	15.3 mm (0.60 in)

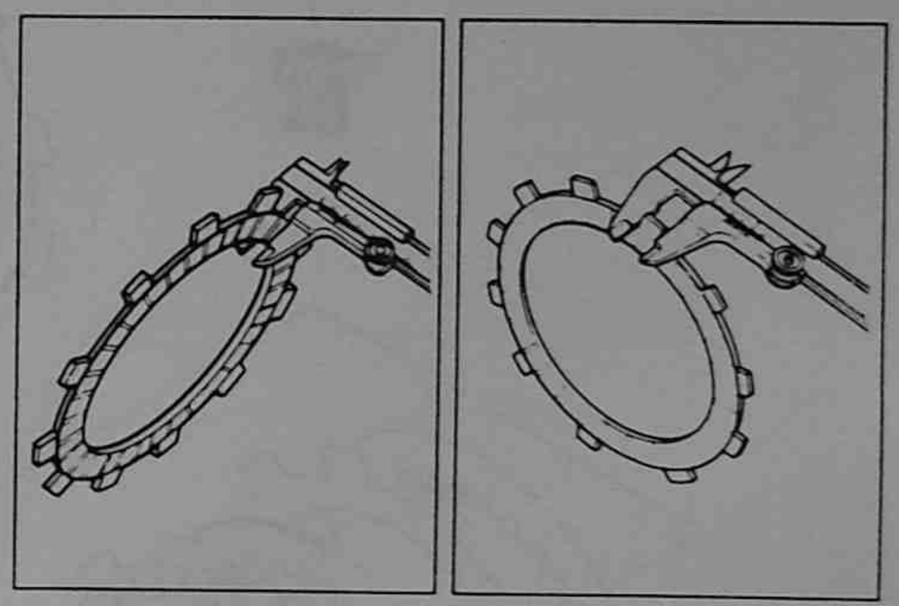

- Inspect the drive plates for wear, distortion and discoloration.

Driven Plate

- Measure the driven plate distortion.

Service limit : 0.10 mm (0.004 in)

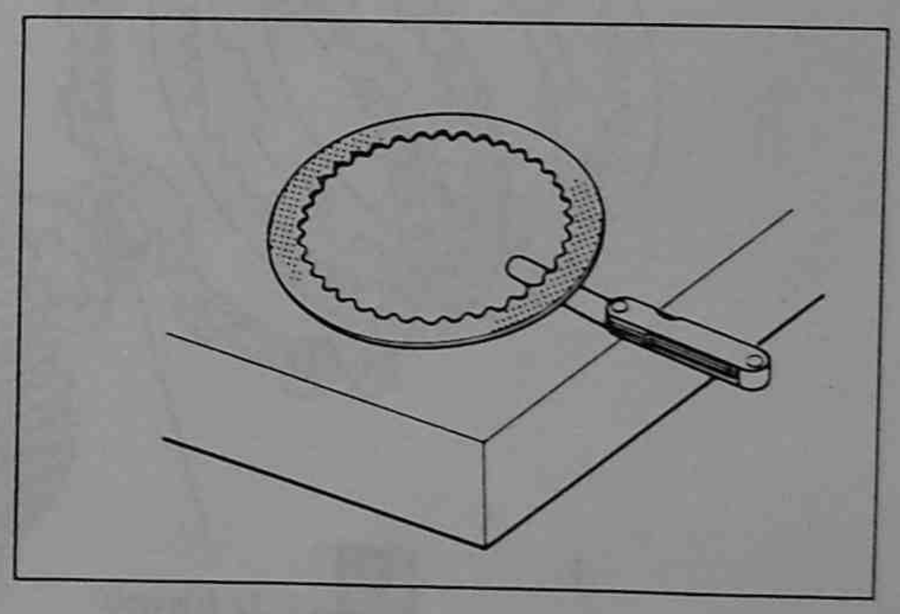

- Inspect the driven plates for wear and discoloration.

Clutch Spring

- Measure the clutch spring free length.

Service limit : 45.5 mm (1.79 in)

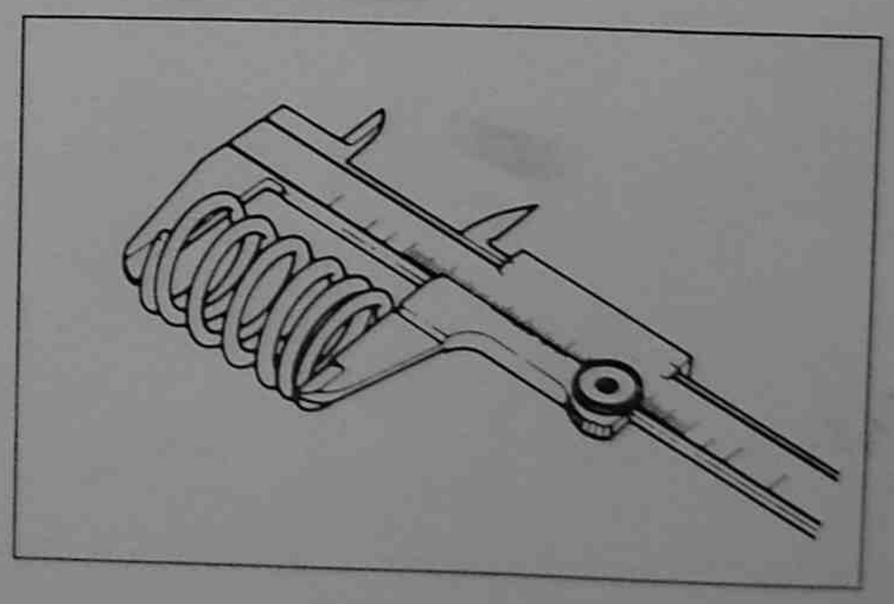

NOTE: Replace five clutch springs together even if only one spring is beyond the service limit.

RACK AND PINION INSPECTION

- Inspect the clutch release rack and pinion for wear and damage.
- Inspect the clutch release arm for smooth movement and oil leakage around the oil seal.

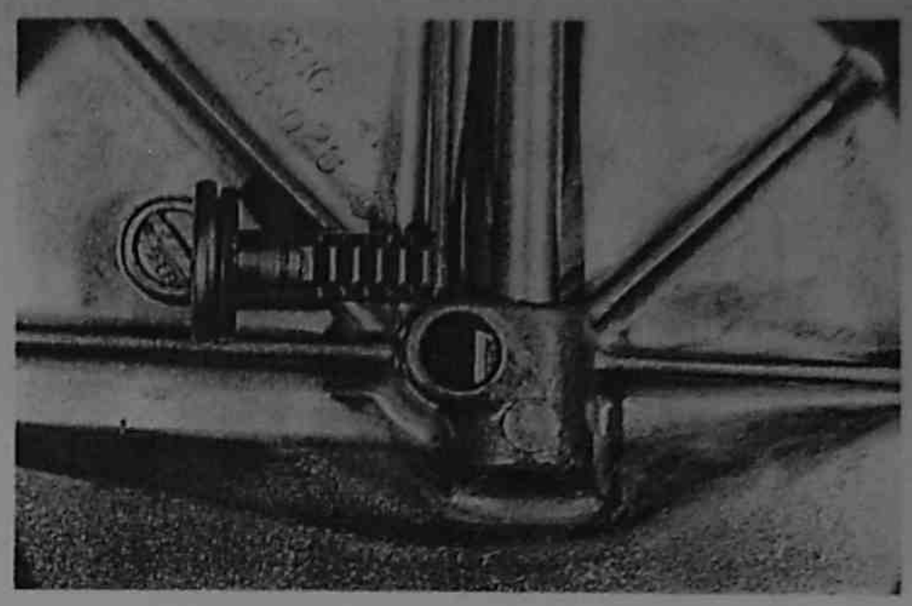

CLUTCH PLATE REASSEMBLING

- Apply transmission oil to the drive and driven plates and fit them.
- Fit the bearing, rack and pressure plate.
- Fit the clutch springs, washers and bolts.
- Tighten the bolts diagonally.

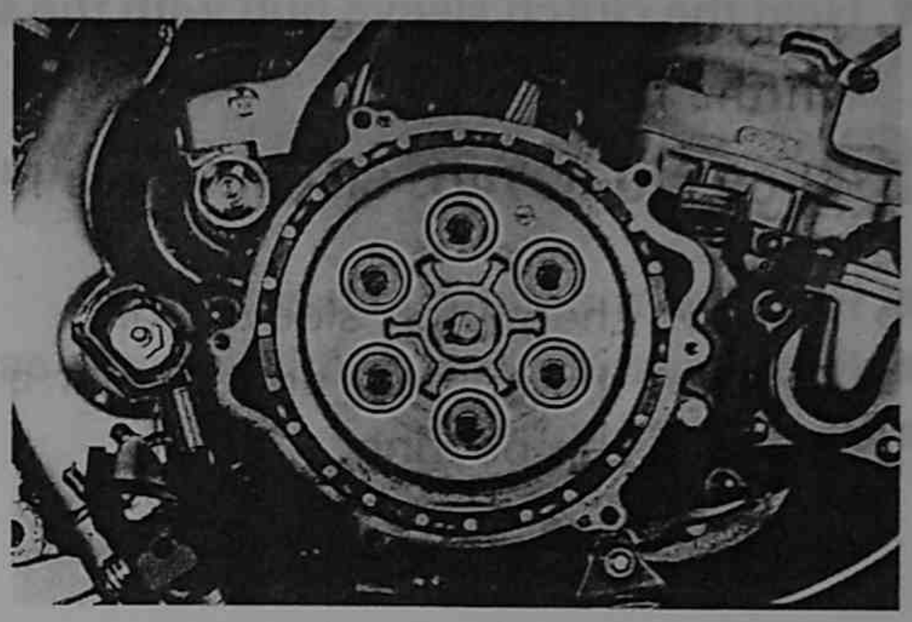

- Align the clutch release rack teeth with the pinion gear.
- Replace the O-ring with a new one.
- Fit the cover.
- Tighten the bolts diagonally.
- Reassemble the rear brake pedal. (☞ 14-11)

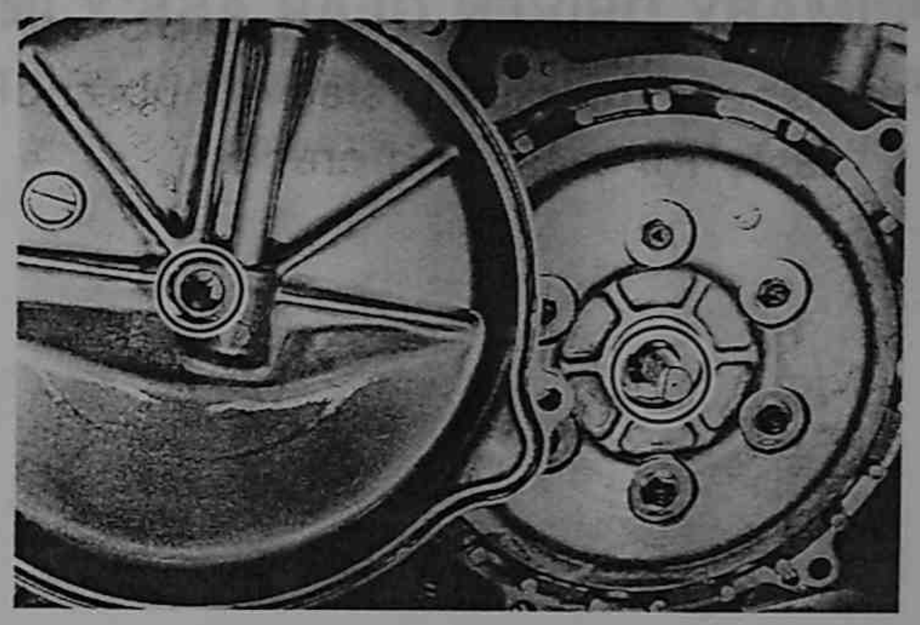

- Fit the clutch release arm. Inspect the clutch cable play. (☞ 2-7)
- Fill the transmission with specified transmission oil to the correct level. (☞ 2-5)

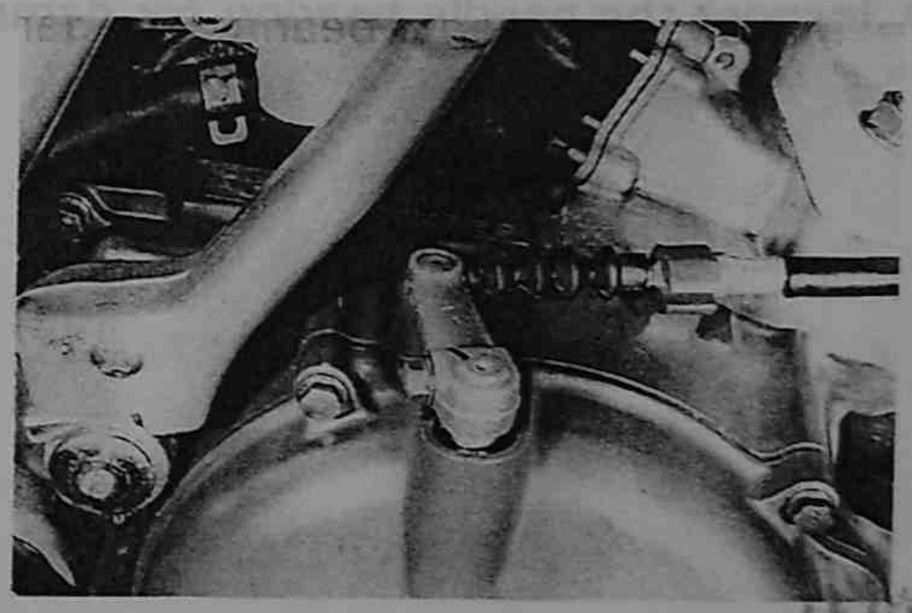

PRIMARY DRIVEN GEAR ASS'Y REMOVAL

- Drain transmission oil. (☞ 2-5)
- Drain coolant. Disconnect the radiator hose. (☞ 11-2)
- Remove the cotter pin and rear brake pivot bolt. (☞ 14-11)
- Remove the clutch release arm.
- Remove the kick starter lever.
- Remove the clutch cover bolts. Remove the clutch cover.

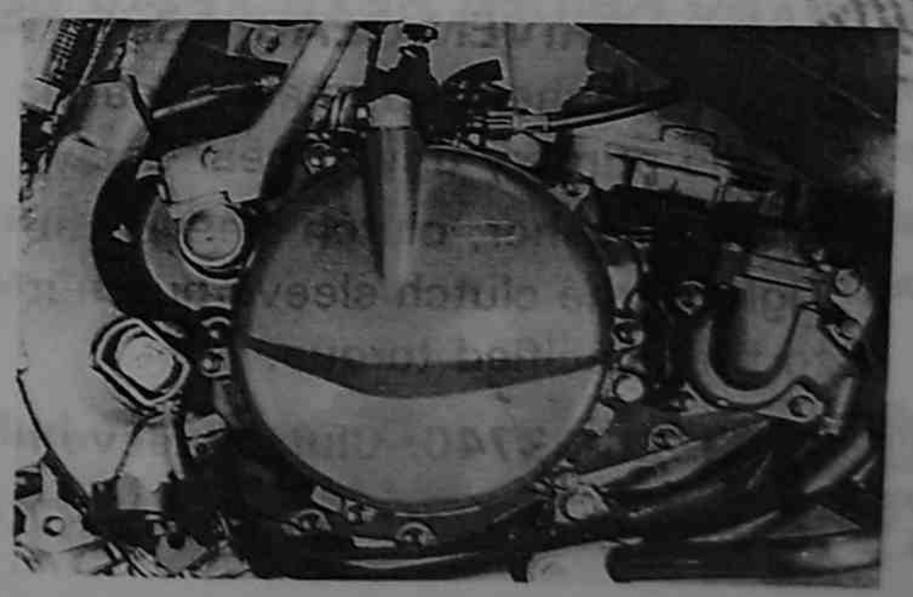

- Remove the bolts and pressure plate. (☞ 7-2)
- Remove the clutch plates. (☞ 7-2)
- Flatten the lock washer.

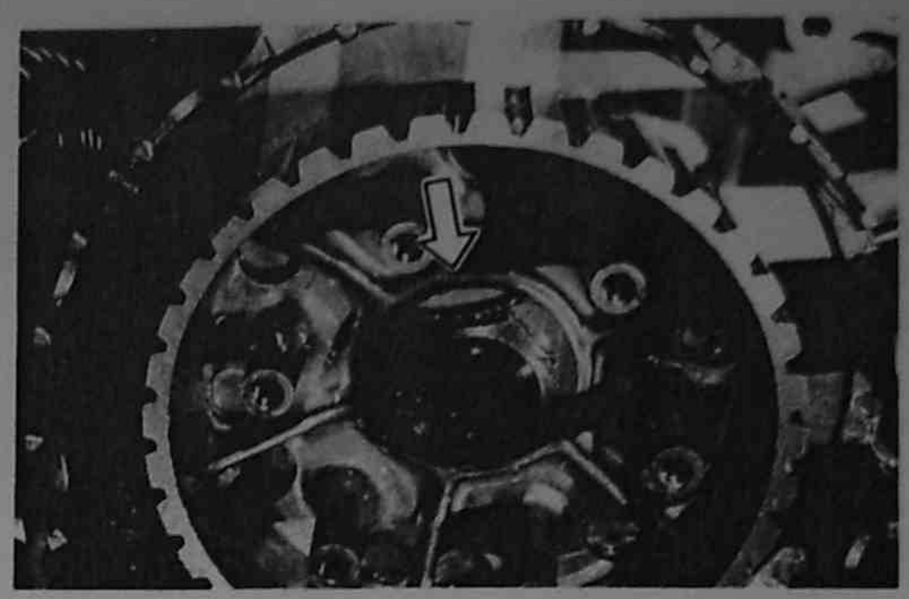

- Hold the clutch sleeve hub with the special tool and loosen the nut.

TOOL 09920-53740: Clutch sleeve hub holder

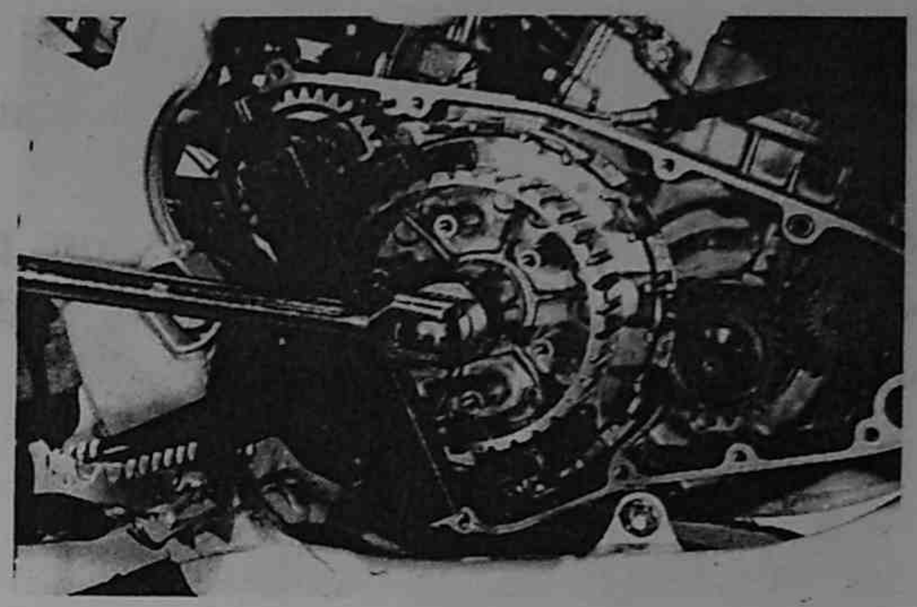

- Remove the clutch sleeve hub.
- Remove the primary driven gear ass'y.
- Remove the bearing.

PRIMARY DRIVEN GEAR ASS'Y INSPECTION

- Inspect the clutch sleeve hub and primary driven gear ass'y for wear and cracks.

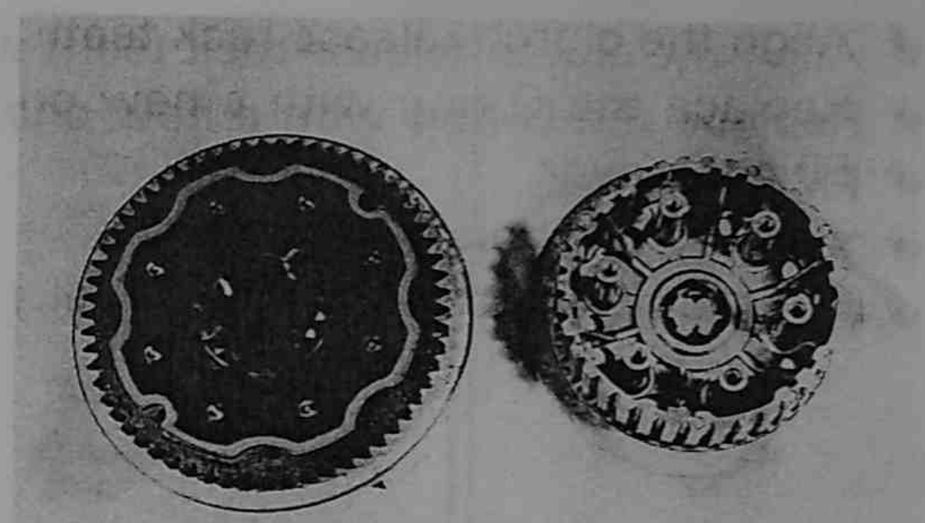

- Inspect the needle bearing for damage.

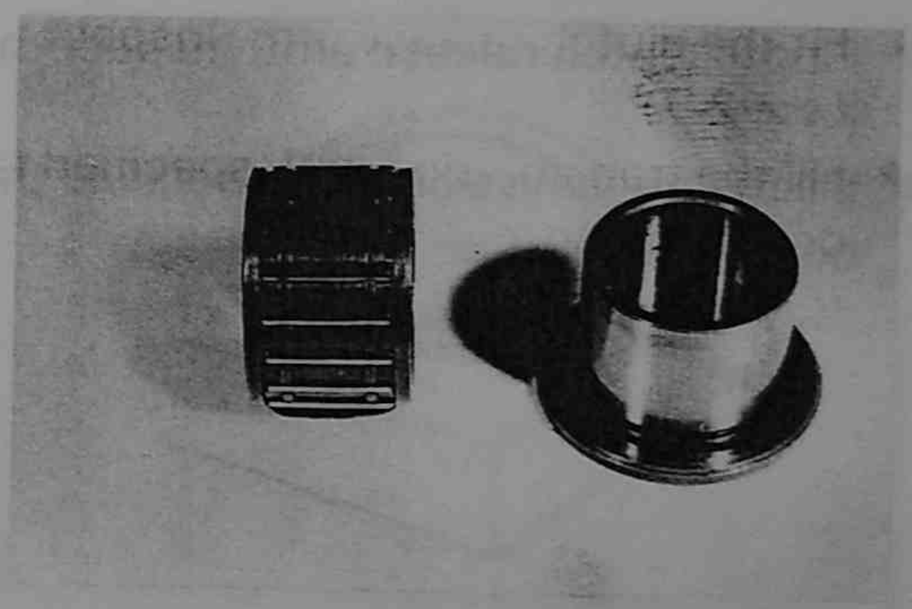

PRIMARY DRIVEN GEAR ASS'Y REASSEMBLY

- Fit the washer and needle bearing.
- Fit the primary driven gear ass'y.
- Fit the washer, clutch sleeve hub and lock washer.
- Tighten the clutch sleeve hub nut with the special tool to the specified torque.

TOOL 09920-53740: Clutch sleeve hub holder

Clutch sleeve hub nut: 70 N·m (7.0 kg-m, 50.5 lb-ft)

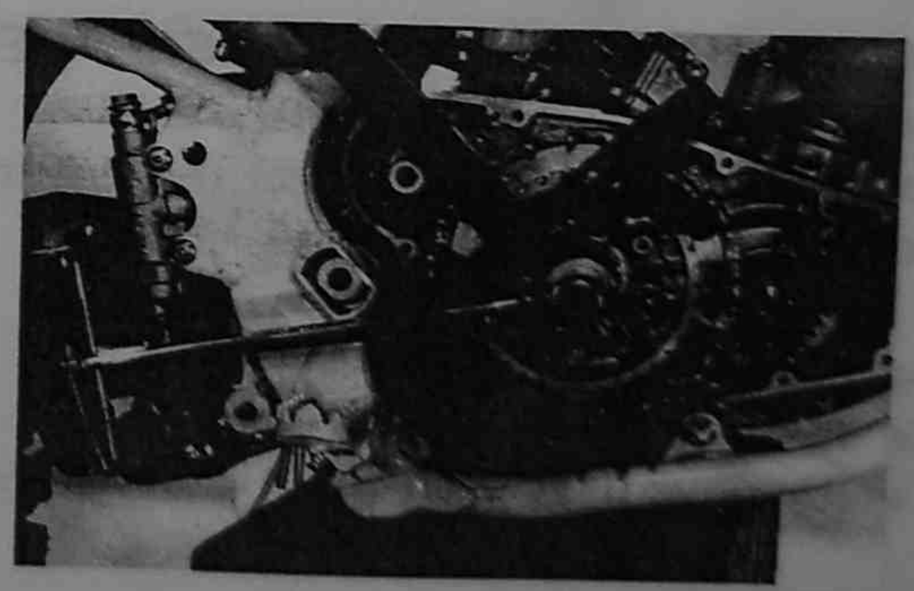

- Bend the lock washer to secure the nut.
- Reassemble the clutch plates and pressure plate. (☞7-3)
- Fit the dowel pins. Replace the O-ring with a new one.
- Fit the clutch cover and bolts. Tighten the clutch cover bolts diagonally.
- Reassemble the kick starter lever.
- Reassemble the clutch release arm.
- Reassemble the rear brake pedal. (☞ 14-11)
- Reassemble the radiator hose and refill coolant. (☞ 11-2)
- Refill transmission oil. (☞ 2-5)

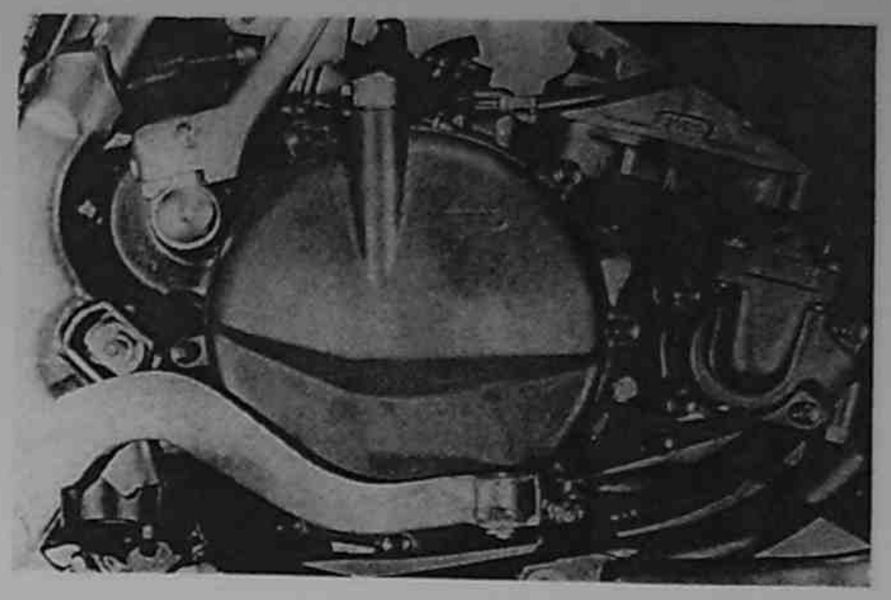

KICK STARTER

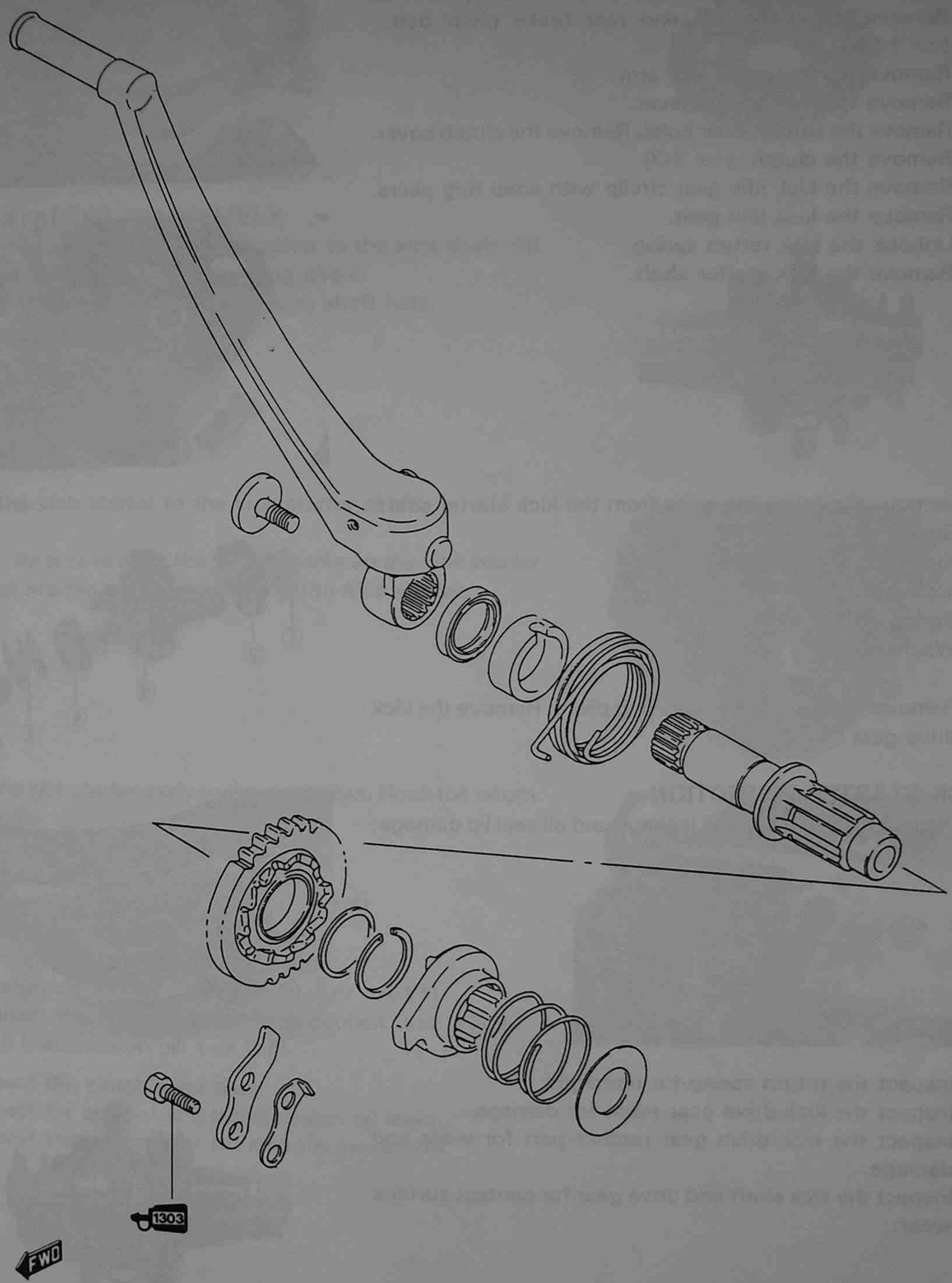

KICK STARTER REMOVAL

- Drain transmission oil. (☞ 2-5)
- Drain coolant. Disconnect the radiator hose. (☞ 11-2)
- Remove the cotter pin and rear brake pivot bolt. (☞ 14-11)
- Remove the clutch release arm.
- Remove the kick starter lever.
- Remove the clutch cover bolts. Remove the clutch cover.
- Remove the clutch. (☞ 7-3)
- Remove the kick idle gear circlip with snap ring pliers.
- Remove the kick idle gear.
- Unhook the kick return spring.
- Remove the kick starter shaft.

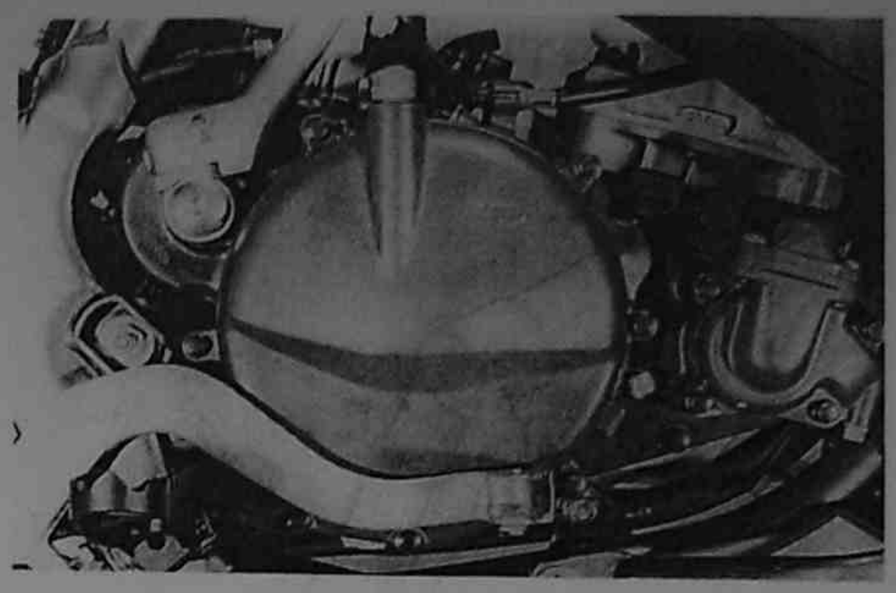

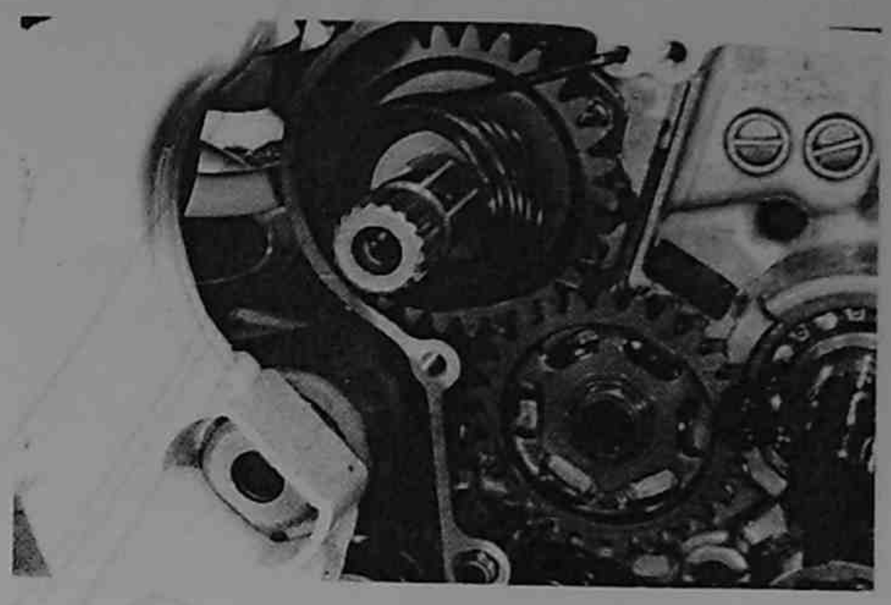

- Remove the following parts from the kick starter shaft:
  Spring guide ①
  Kick return spring ②
  Kick starter ④
  Spring ⑤
  Washer ⑥

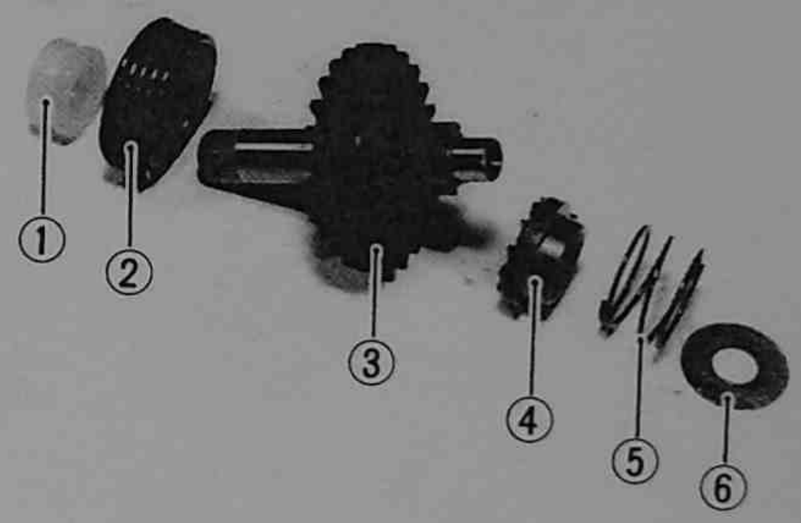

- Remove the circlip with snap ring pliers. Remove the kick drive gear ③.

KICK STARTER INSPECTION

- Inspect the oil seal for oil leakage and oil seal lip damage.

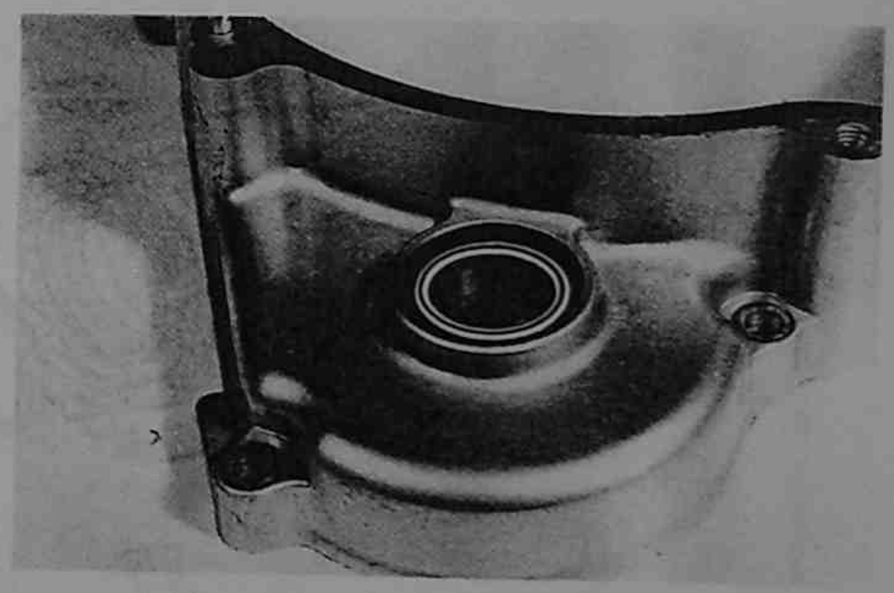

- Inspect the return spring for damage.
- Inspect the kick drive gear teeth for damage.
- Inspect the kick drive gear ratchet part for wear and damage.
- Inspect the kick shaft and drive gear for contact surface wear.

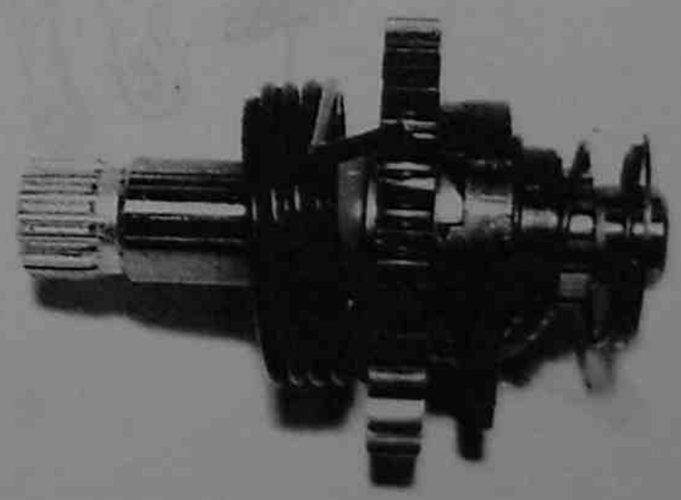

- Inspect the kick idle gear teeth for damage.
- Inspect the kick idle gear and driveshaft contact surface for wear.

KICK STARTER REASSEMBLY

- Fit the kick drive gear and washer to the kick shaft. Fit the circlip firmly with snap ring pliers.
- Fit the return spring into the kick shaft hole.
- Fit the spacer.

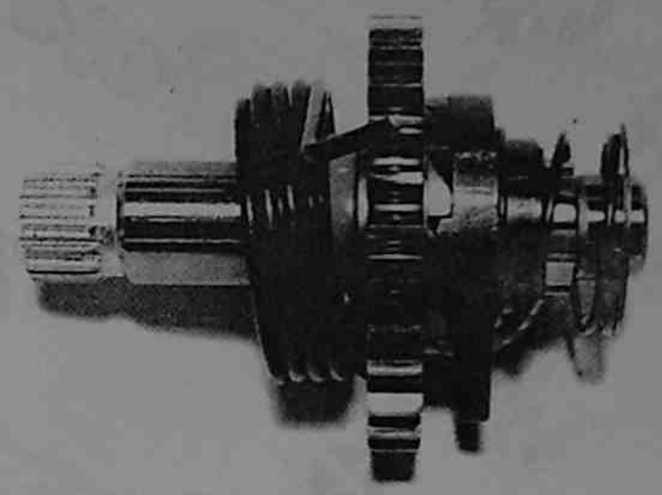

- Fit the kick starter to the kick starter shaft.

NOTE: Be sure to align the punch marks on the kick starter and kick starter shaft when fitting the kick starter.

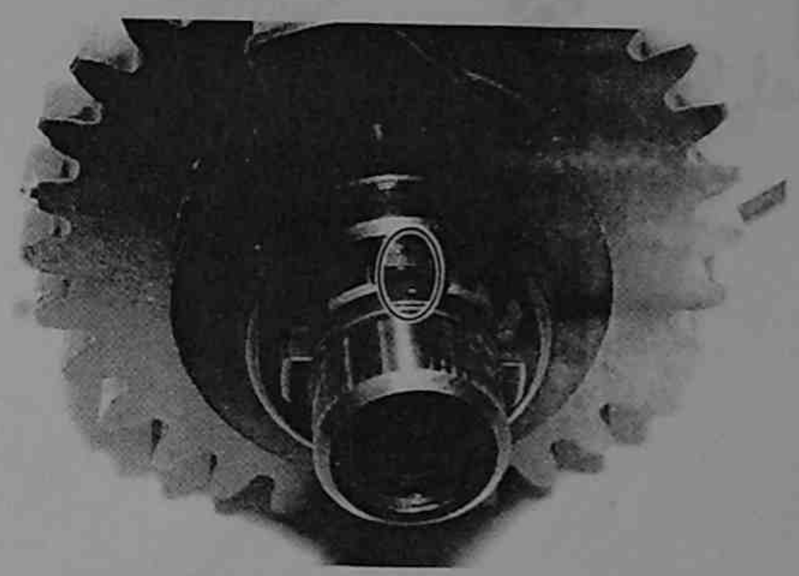

- Fit the kick starter ass'y to the crankcase. Hook the return spring.
- Reassemble the kick idle gear.
- Reassemble the clutch. (☞ 7-5)
- Reassemble the clutch cover. (☞ 7-5)
- Reassemble the kick starter lever.
- Reassemble the clutch release arm.
- Reassemble the rear brake pedal. (☞ 14-11)
- Connect the radiator hose. Refill coolant. (☞ 11-2)
- Refill transmission oil. (☞ 2-5)

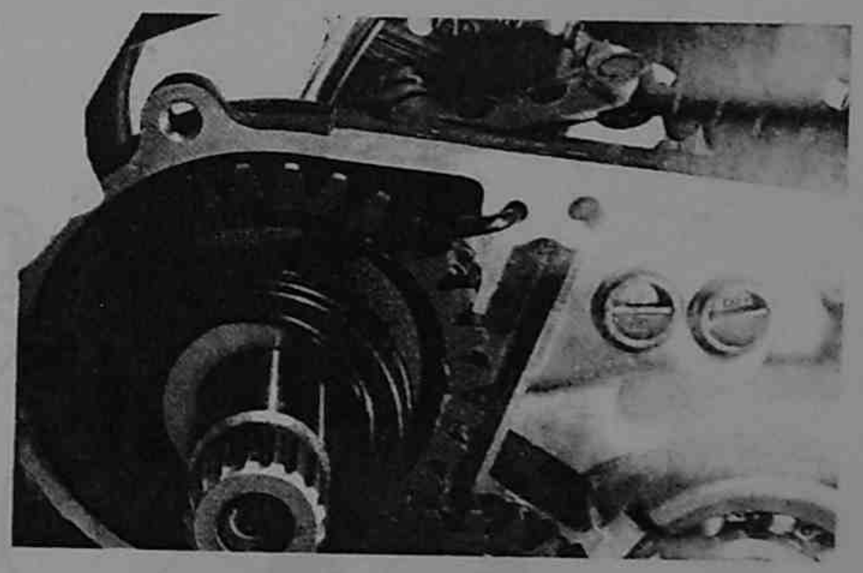

- Inspect the clutch lever play.
- Inspect for coolant and transmission oil leaks.
- Inspect the kick starter for smooth movement.

TRANSMISSION AND CRANKSHAFT

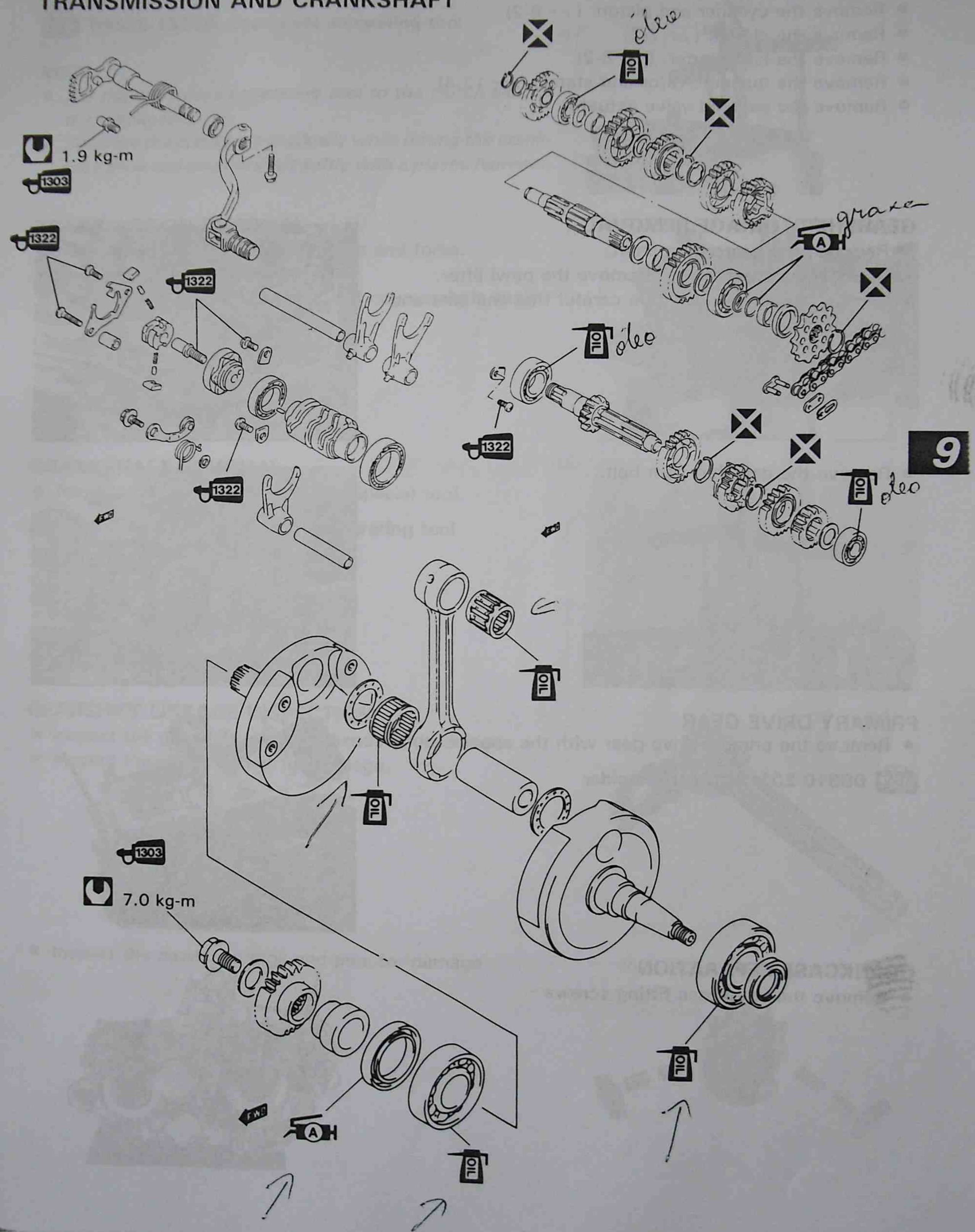

PRIMARY DRIVE GEAR

- Tighten the primary drive gear bolt with the special tool to the specified torque.

Primary drive gear bolt: 70 N·m (7.0 kg-m, 50.5 lb-ft)

TOOL 09910-20116: Conrod holder

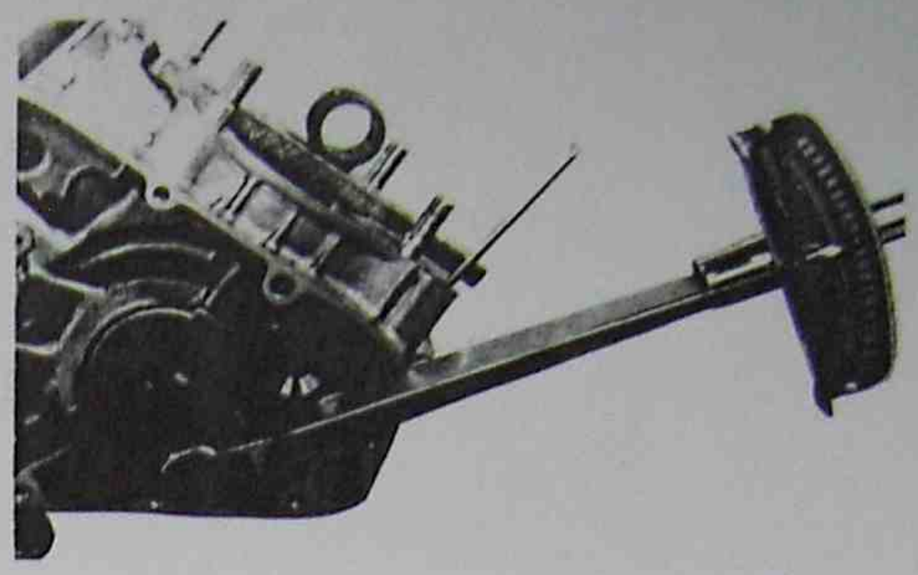

GEARSHIFT LINKAGE REASSEMBLY

- Fit the spring pin and pawl to the driven gear. Wider side Ⓐ of pawl ① should be positioned outside.

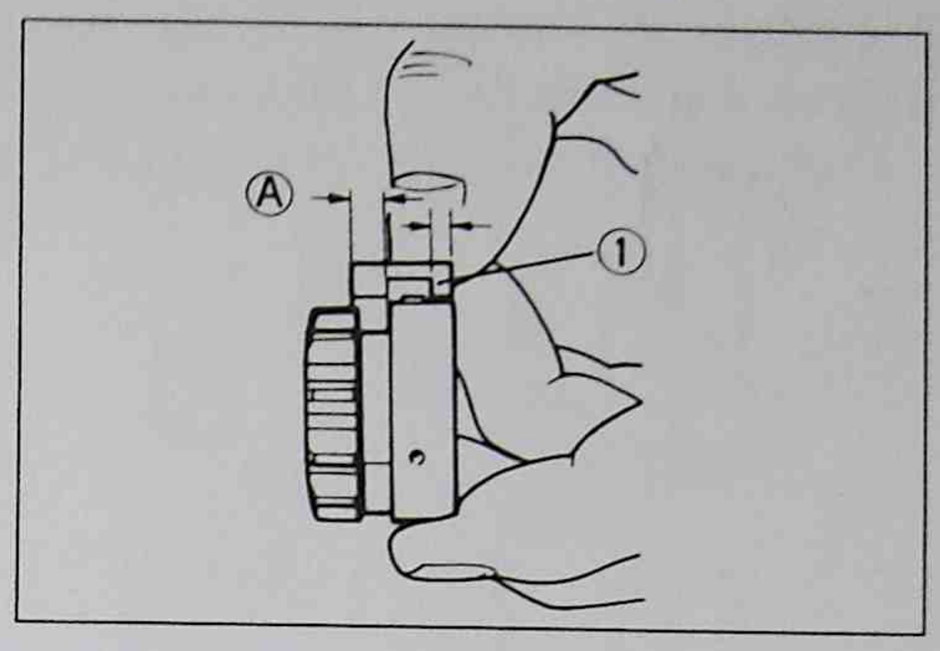

- Reassemble the driven gear and pawl lifter.
- Apply thread lock "1322" to the bolt and screws and tighten them.

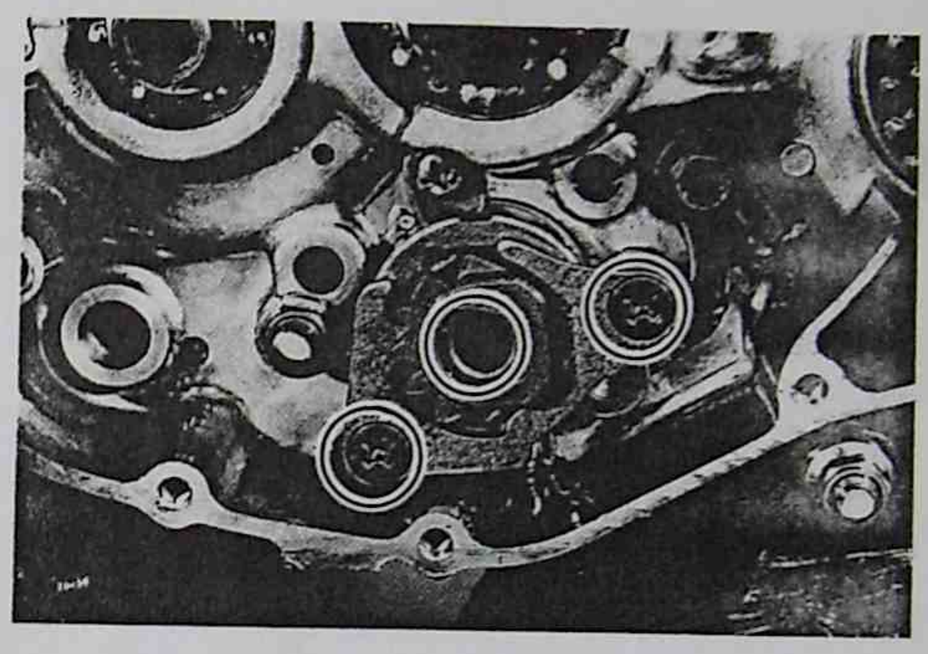

- Fit the gearshift return spring to the gearshift shaft properly.

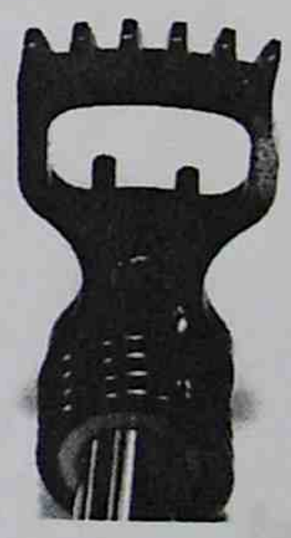

- Align the center lines of drive and driven gears.
- Reassemble the exhaust valve actuator.
- Reassemble the stator and magneto rotor. (☞ 12-4)
- Reassemble the kick starter. (☞ 8-3)
- Reassemble the clutch. (☞ 7-3)
- Reassemble the piston and cylinder. (☞ 6-5)
- Remount the engine. (☞ 5-2)

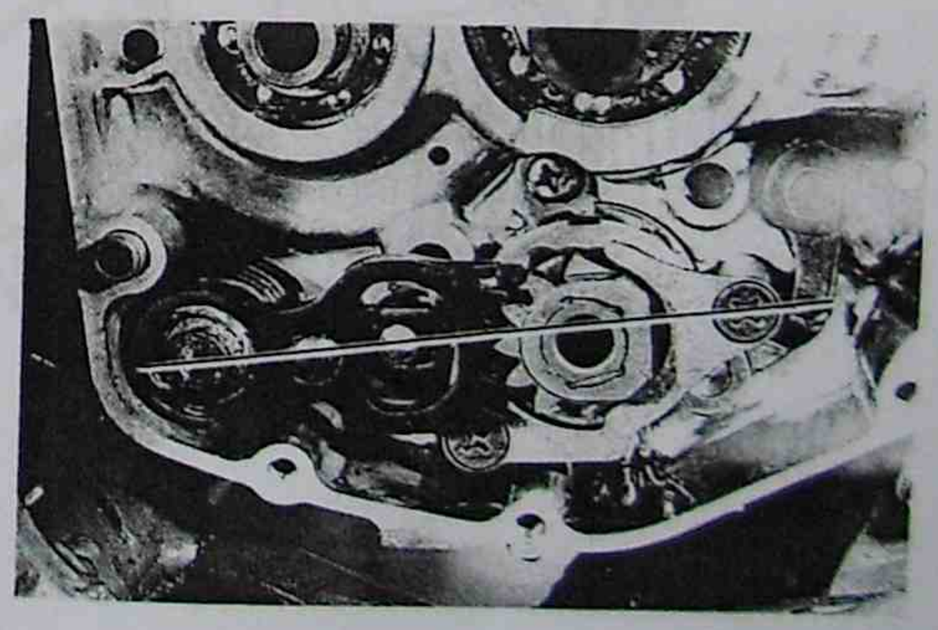

- Dismount the engine. (☞ 5-1)
- Remove the cylinder and piston. (☞ 6-2)
- Remove the clutch. (☞ 7-2)
- Remove the kick starter. (☞ 8-2)
- Remove the magneto rotor and stator. (☞ 12-4)
- Remove the exhaust valve actuator.

GEARSHIFT LINKAGE REMOVAL

- Remove the gearshifting shaft.
- Remove the two screws. Remove the pawl lifter.
- Remove the driven gear. Be careful that the pins and springs do not fly off.

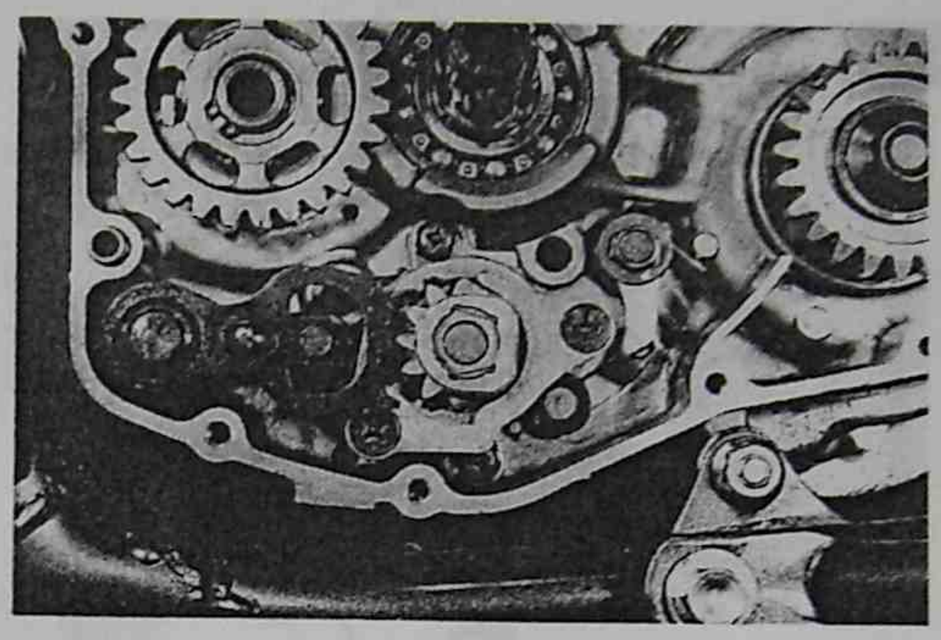

- Remove the gearshift cam bolt.

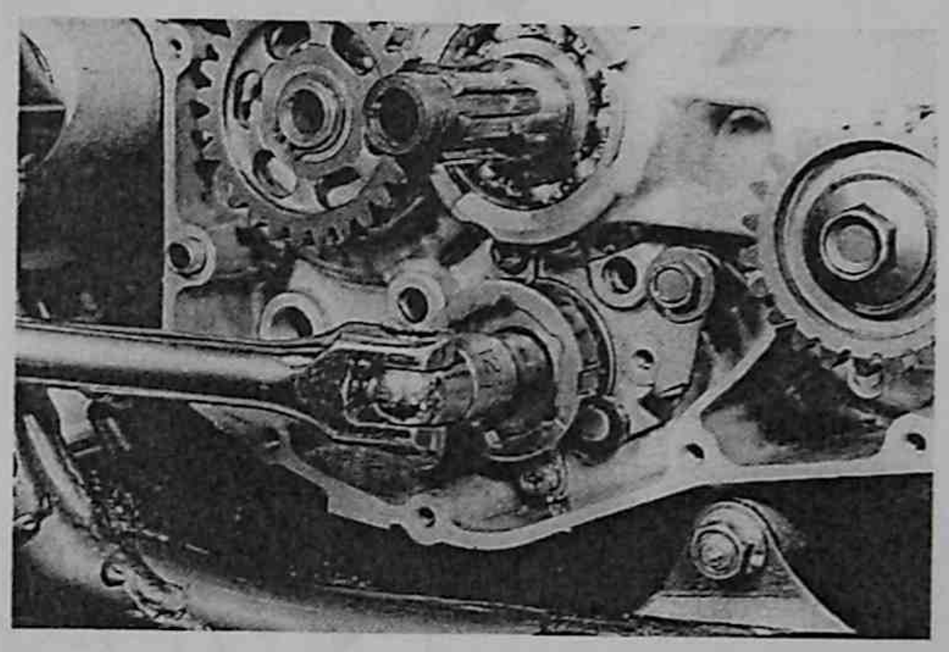

PRIMARY DRIVE GEAR

- Remove the primary drive gear with the special tool.

TOOL **09910-20116: Con-rod holder**

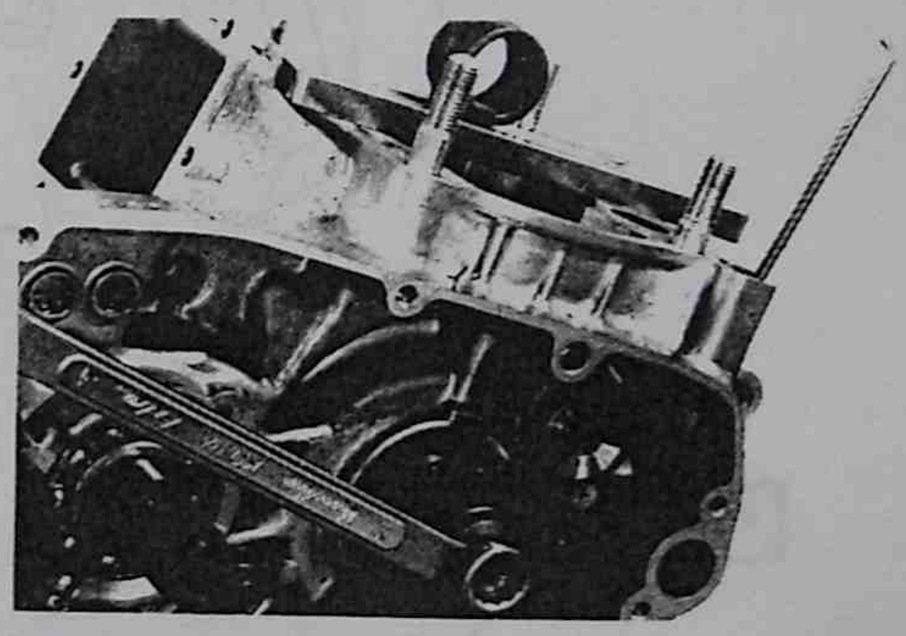

CRANKCASE SEPARATION

- Remove the crankcase fitting screws.

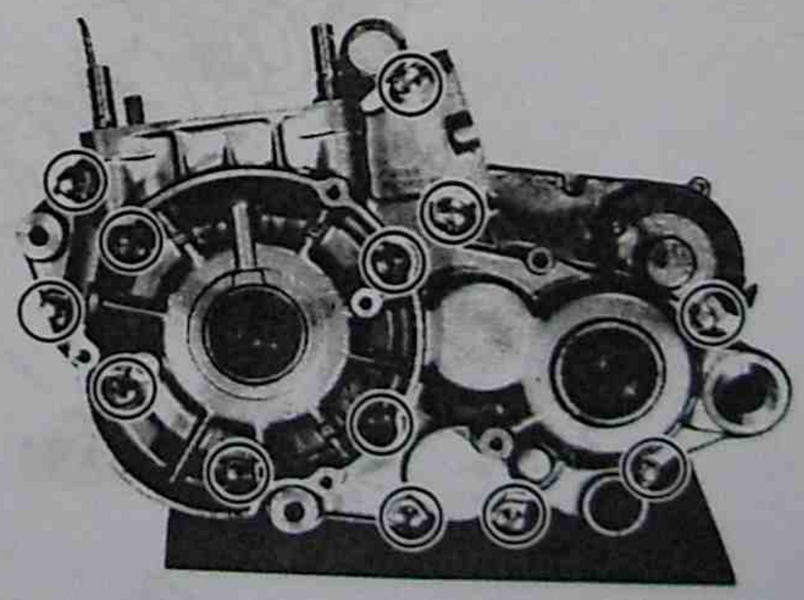

- Separate the crankcase with the special tool.

TOOL 09920-13120: Crankcase separating tool

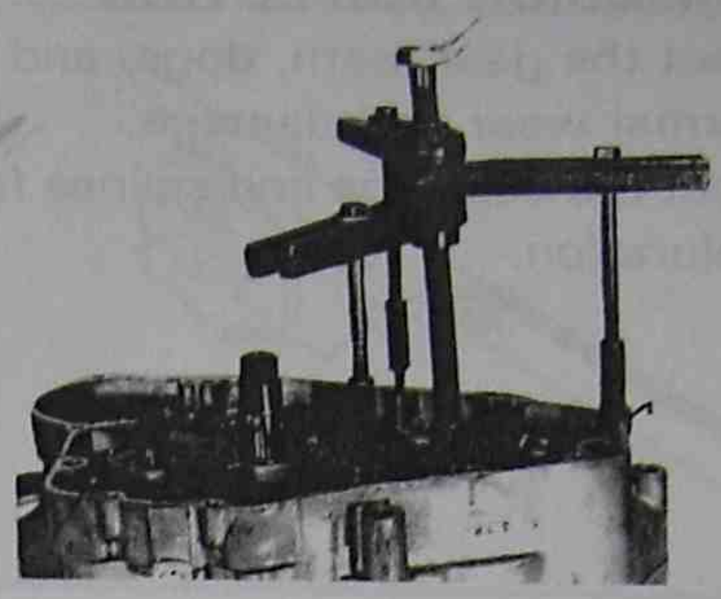

NOTE:
- *Set the crankcase separating tool to the clutch side of the crankcase.*
- *Separate the crankcase gradually while hitting the crankcase boss and countershaft softly with a plastic hammer.*

TRANSMISSION REMOVAL

- Remove the gearshifts fork shafts and forks.
- Remove the gearshift cam.
- Remove the drive shaft ass'y and countershaft ass'y.

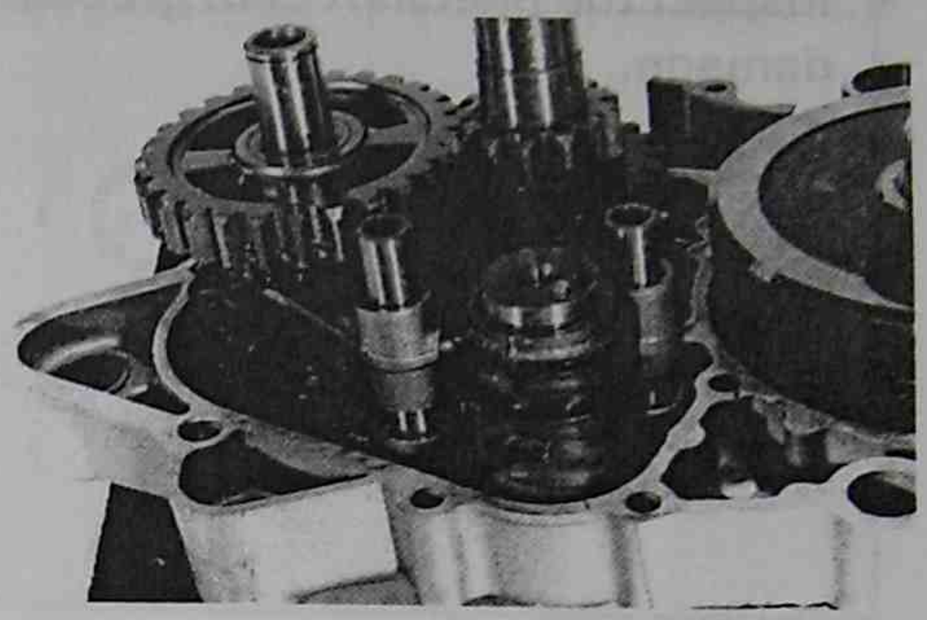

CRANKSHAFT REMOVAL

- Remove the crankshaft with the special tool.

TOOL 09920-13120: Crankcase separating tool

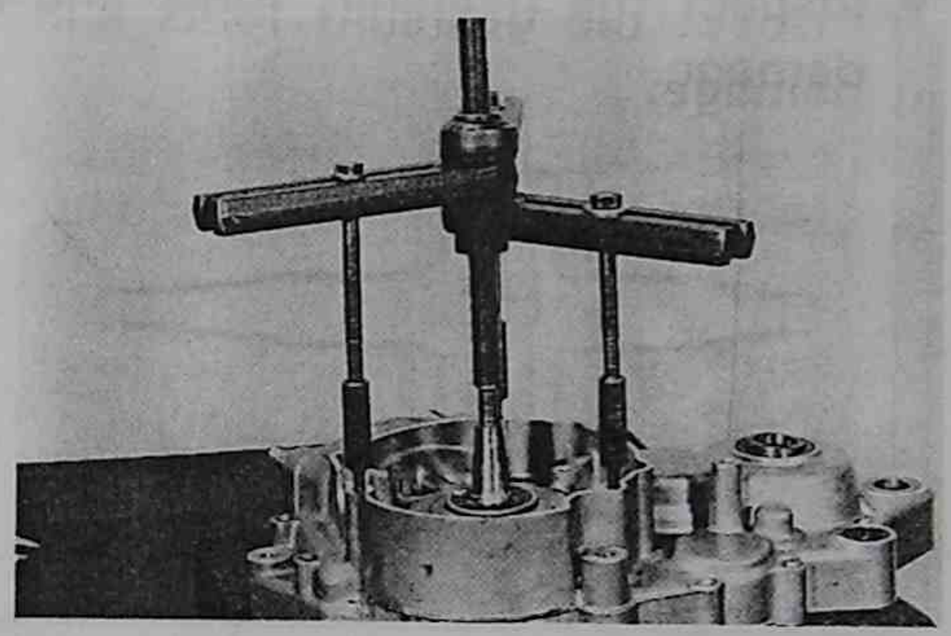

GEARSHIFT LINKAGE INSPECTION

- Inspect the gearshift shaft for bends and damage.
- Inspect the return spring for damage.

- Inspect the pawls, springs and pins for damage.

TRANSMISSION INSPECTION

- Inspect the gear teeth, dogs, and gearshift grooves for abnormal wear and damage.
- Inspect the bushings and splines for abnormal wear and discoloration.

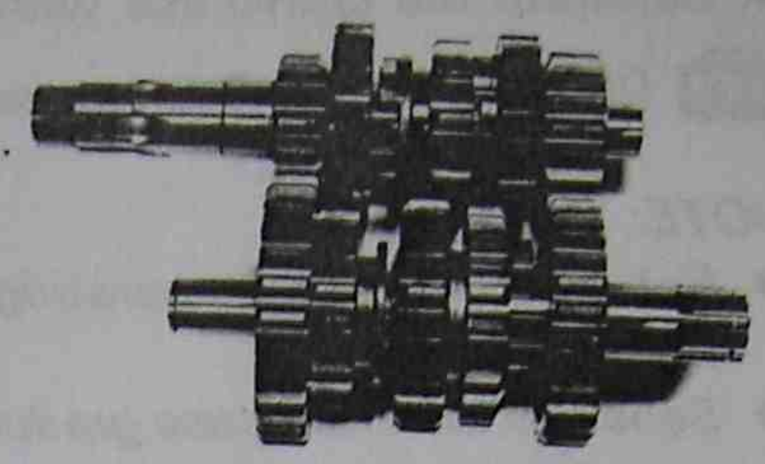

- Inspect the gearshift cam groove for abnormal wear and damage.

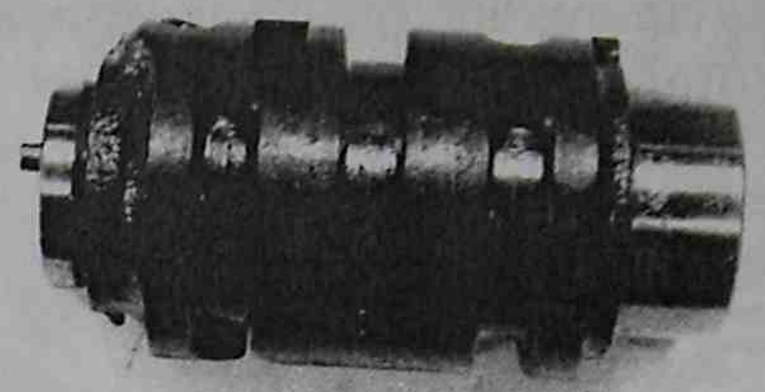

- Inspect the gearshift forks and shafts for wear and damage.

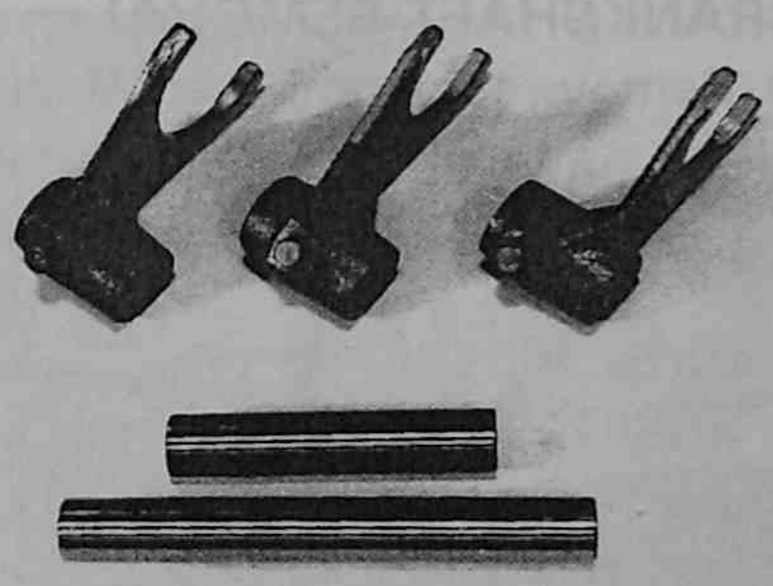

- Measure the gearshift fork thickness with a vernier calipers.

Standard: 4.6–4.7 mm (0.181–0.185 in)

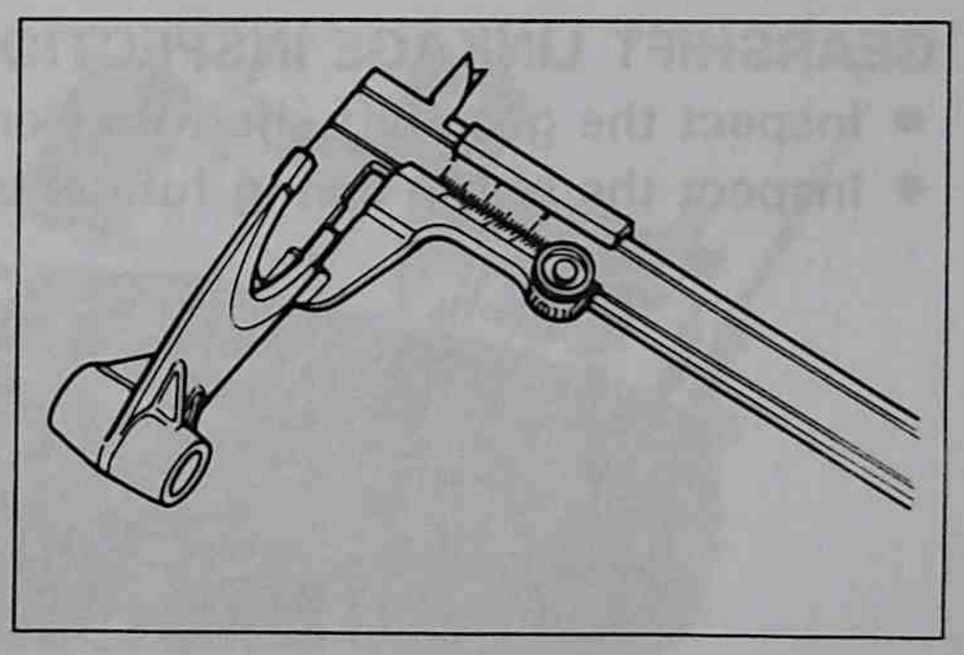

- Measure the gearshift fork groove width with a vernier calipers.

Standard: 4.8–4.9 mm (0.189–0.193 in)

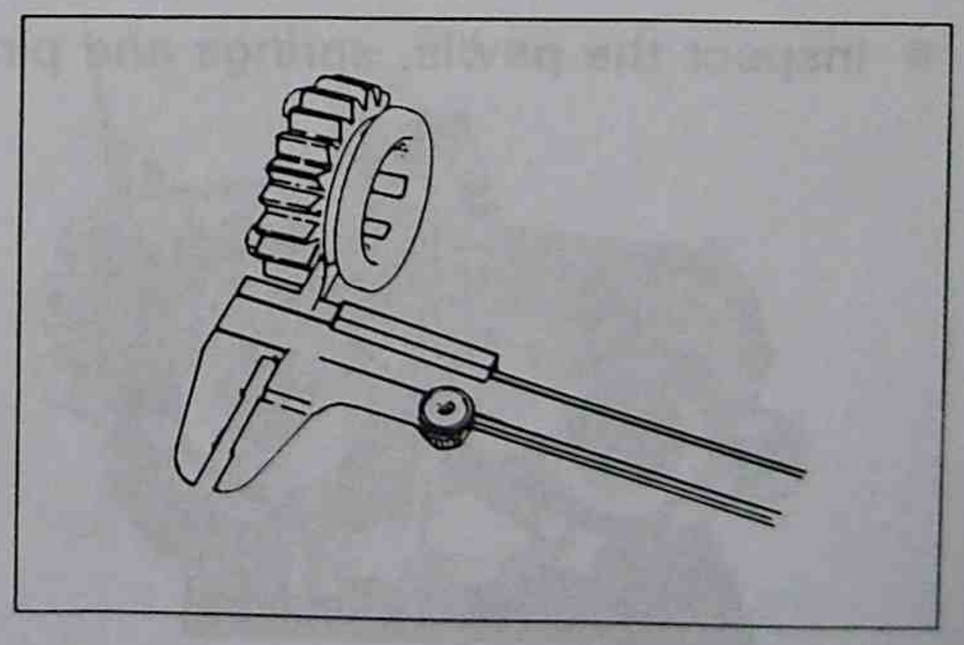

- Measure the gearshift fork to groove clearance with a thickness gauge.

Service limit : 0.50 mm (0.020 in)

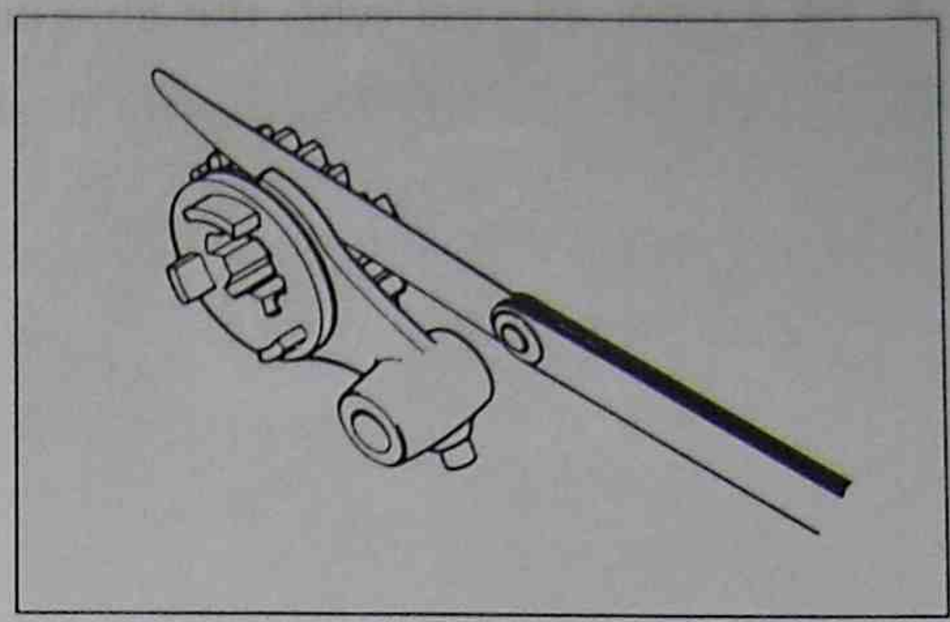

CRANKSHAFT INSPECTION

- Measure the crankshaft runout with V-blocks and dial gauge.

Service limit : 0.05 mm (0.002 in)

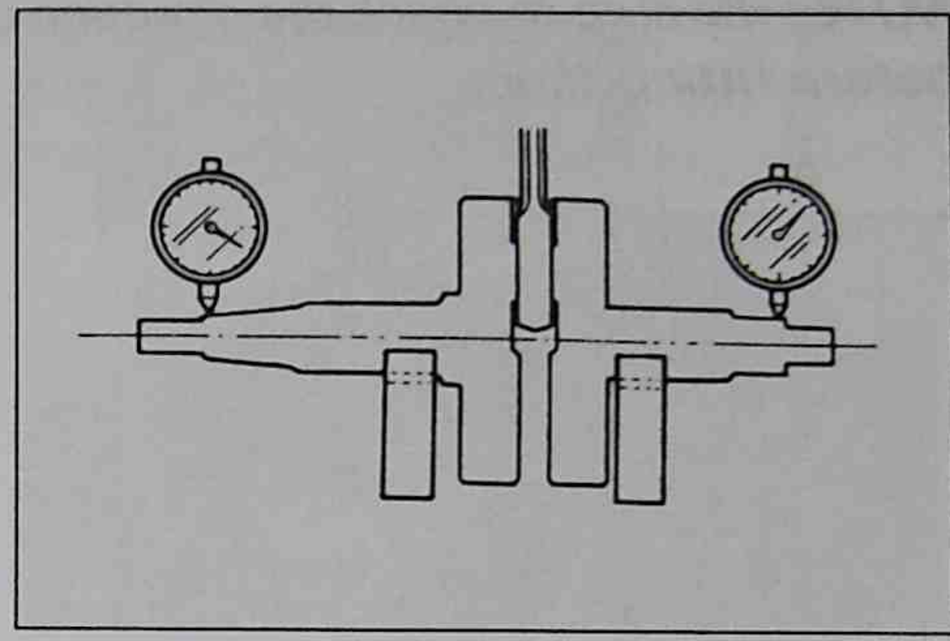

- Measure the crankshaft web to web width with a vernier calipers.

Standard : 57.9–58.1 mm (2.28–2.29 in)

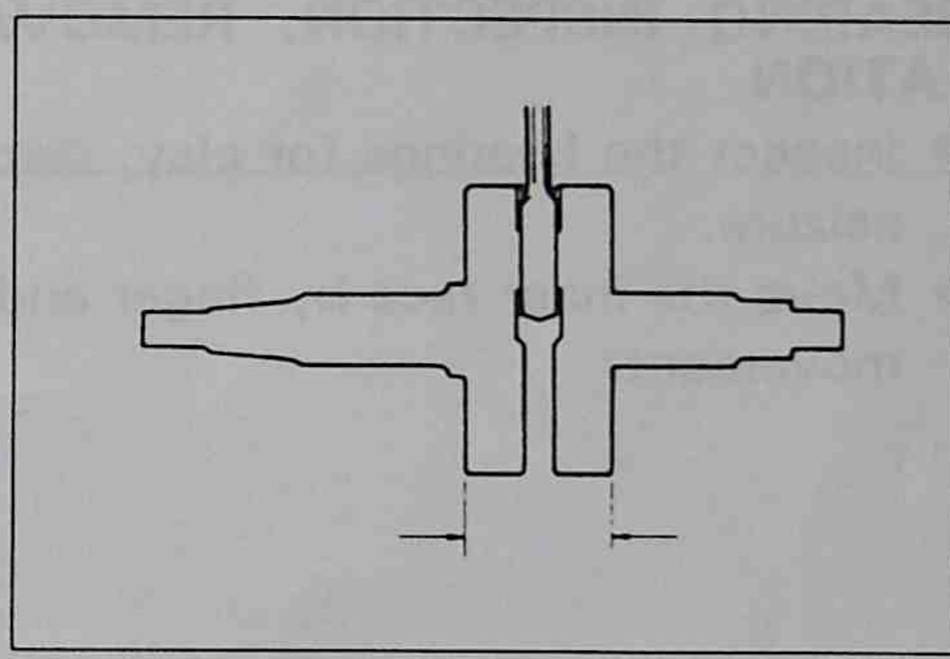

OIL SEAL INSPECTION, REMOVAL AND INSTALLATION

- Inspect the oil seal lips for wear and damage.

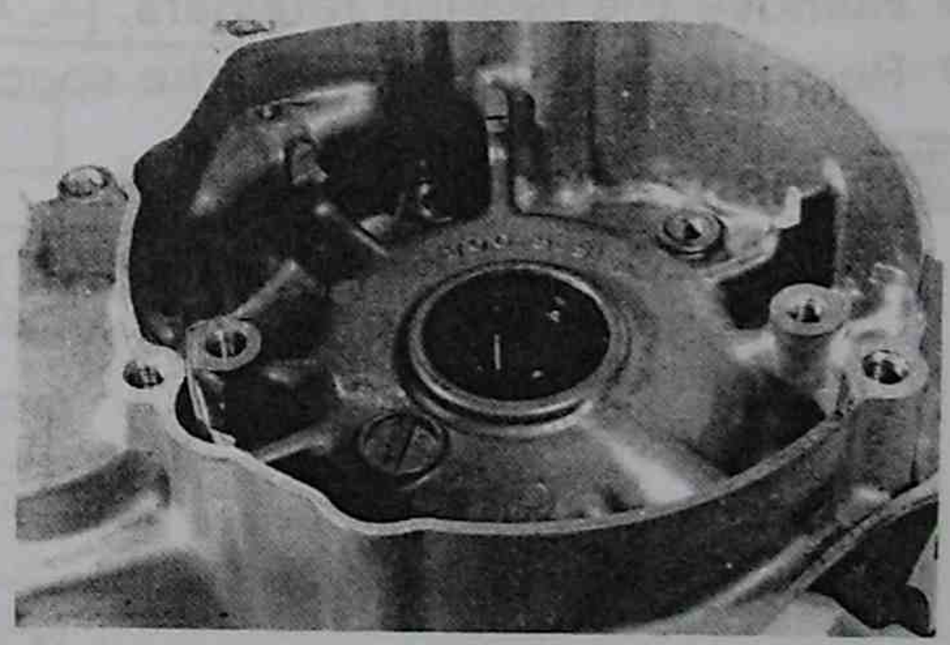

- Remove the oil seal with the special tool.

TOOL **09913-50121: Oil seal remover**

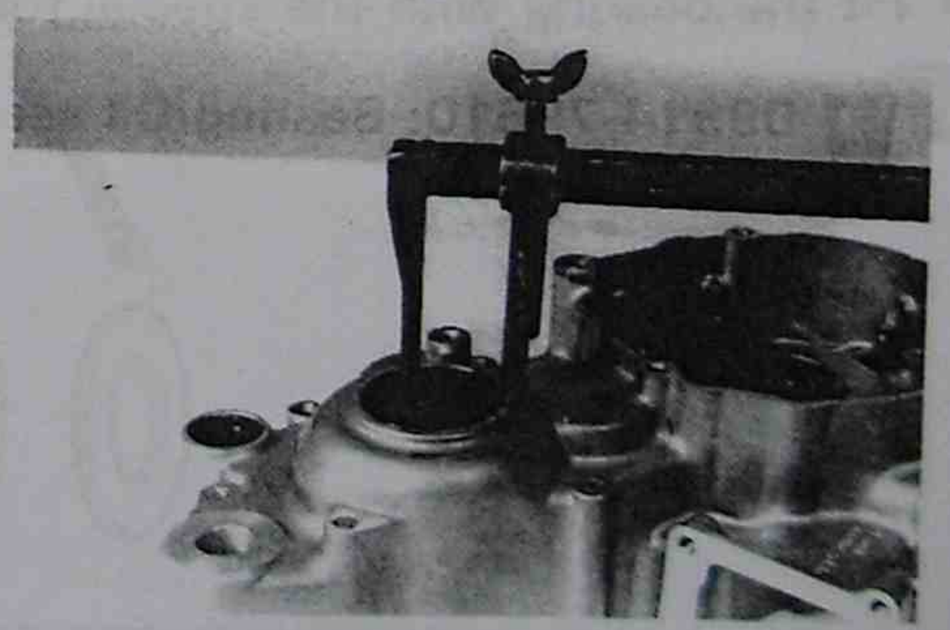

- Fit a new oil seal with the special tool.

TOOL **09914-79610: Bearing/Oil seal installer**

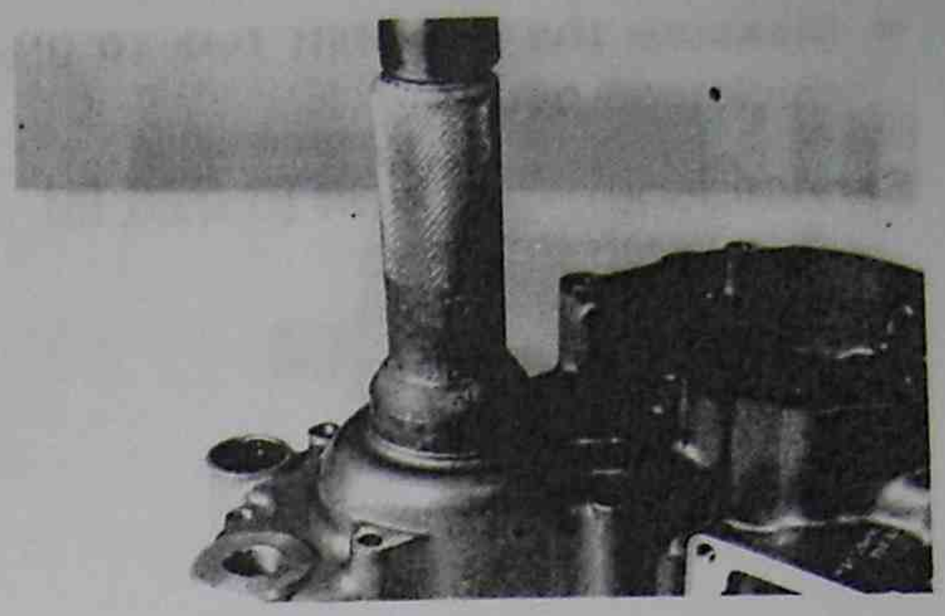

- Apply grease to the oil seal lip.

NOTE: Be sure to check the direction of the bearing oil seals before fitting them.

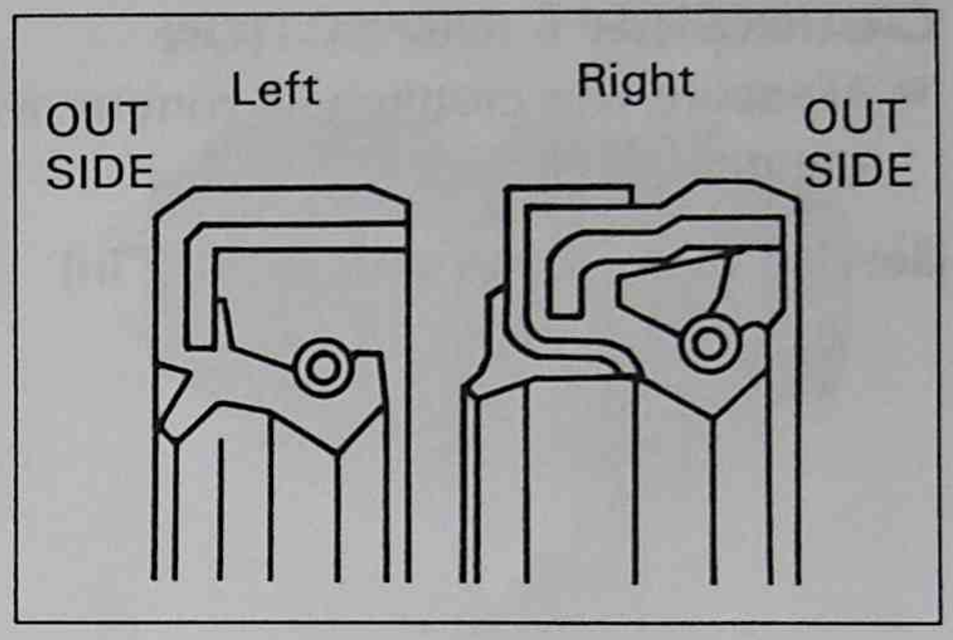

BEARING INSPECTION, REMOVAL AND INSTALLATION

- Inspect the bearings for play, discoloration, wear and seizure.
- Move the inner race by finger and inspect for smooth movement.

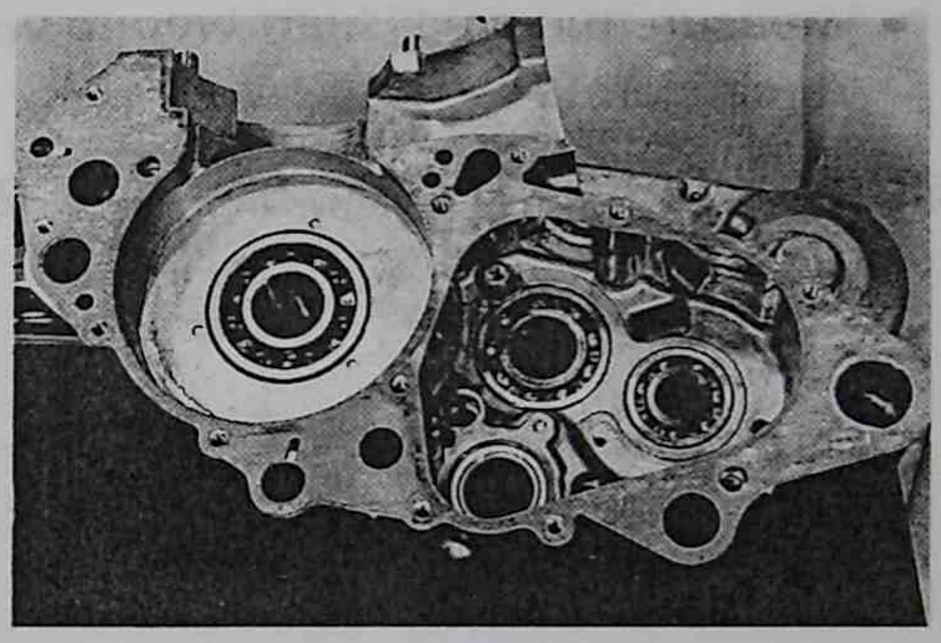

- Remove the bearing retainers.
- Remove the bearing with the special tools.

TOOL **09923-73210: Bearing puller**
09923-74510: Bearing puller
09930-30102: Rotor remover slide shaft

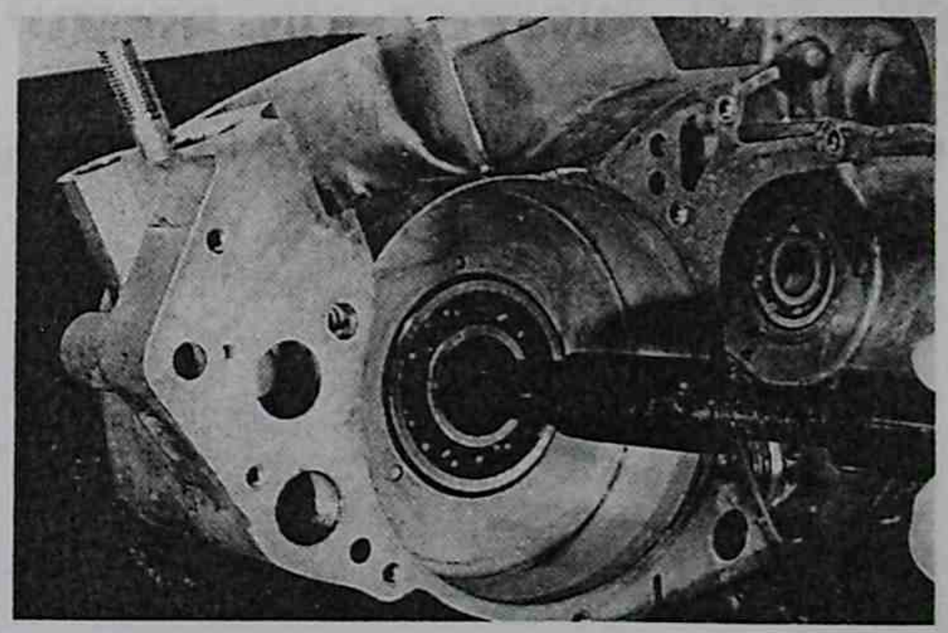

- Fit the bearing with the special tool.

TOOL **09914-79610: Bearing/Oil seal installer**

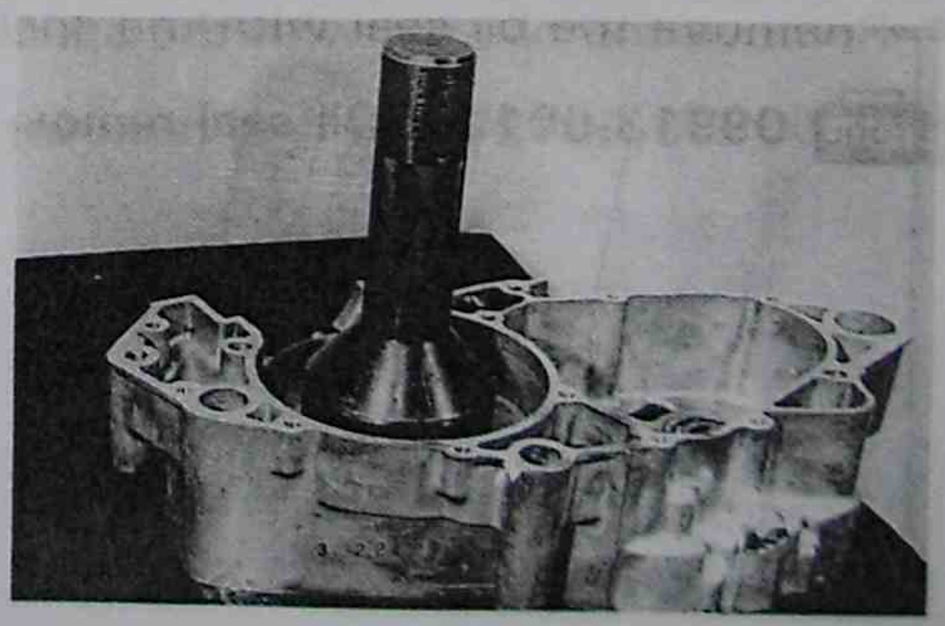

- Apply thread lock "1322" to the bearing retainer screw.

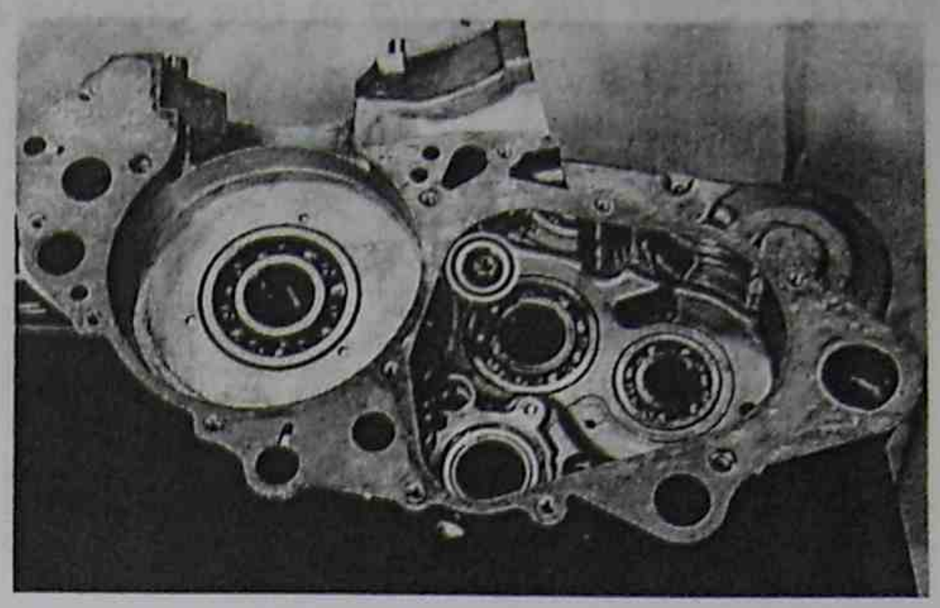

CRANKSHAFT INSTALLATION

- Fit the crankshaft into the left crankcase half with the special tool.

09910-32812: Crankshaft installer
09911-11310: Crankshaft installer attachment

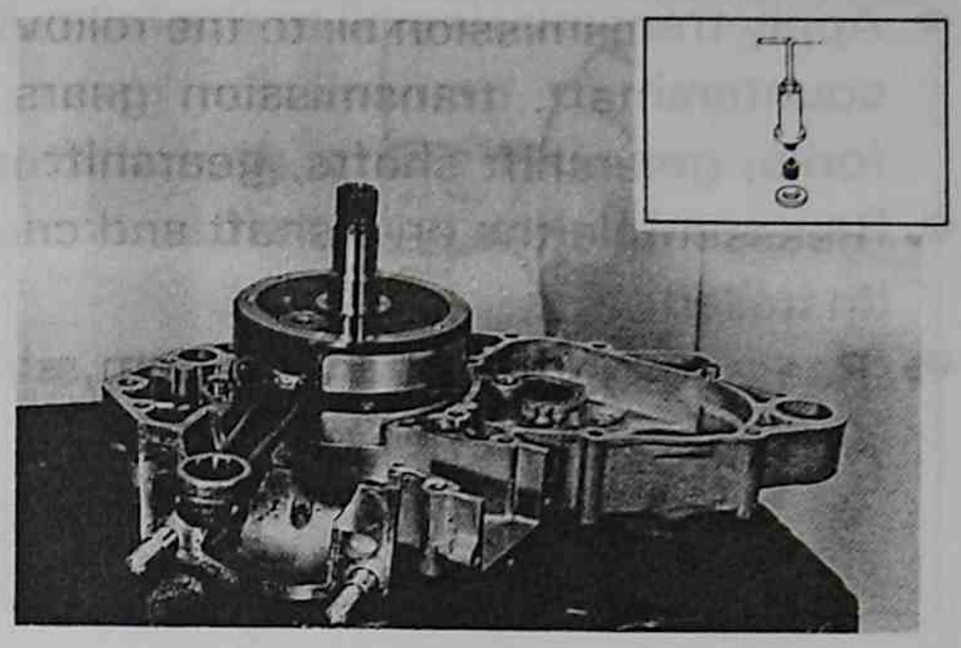

TRANSMISSION REASSEMBLY

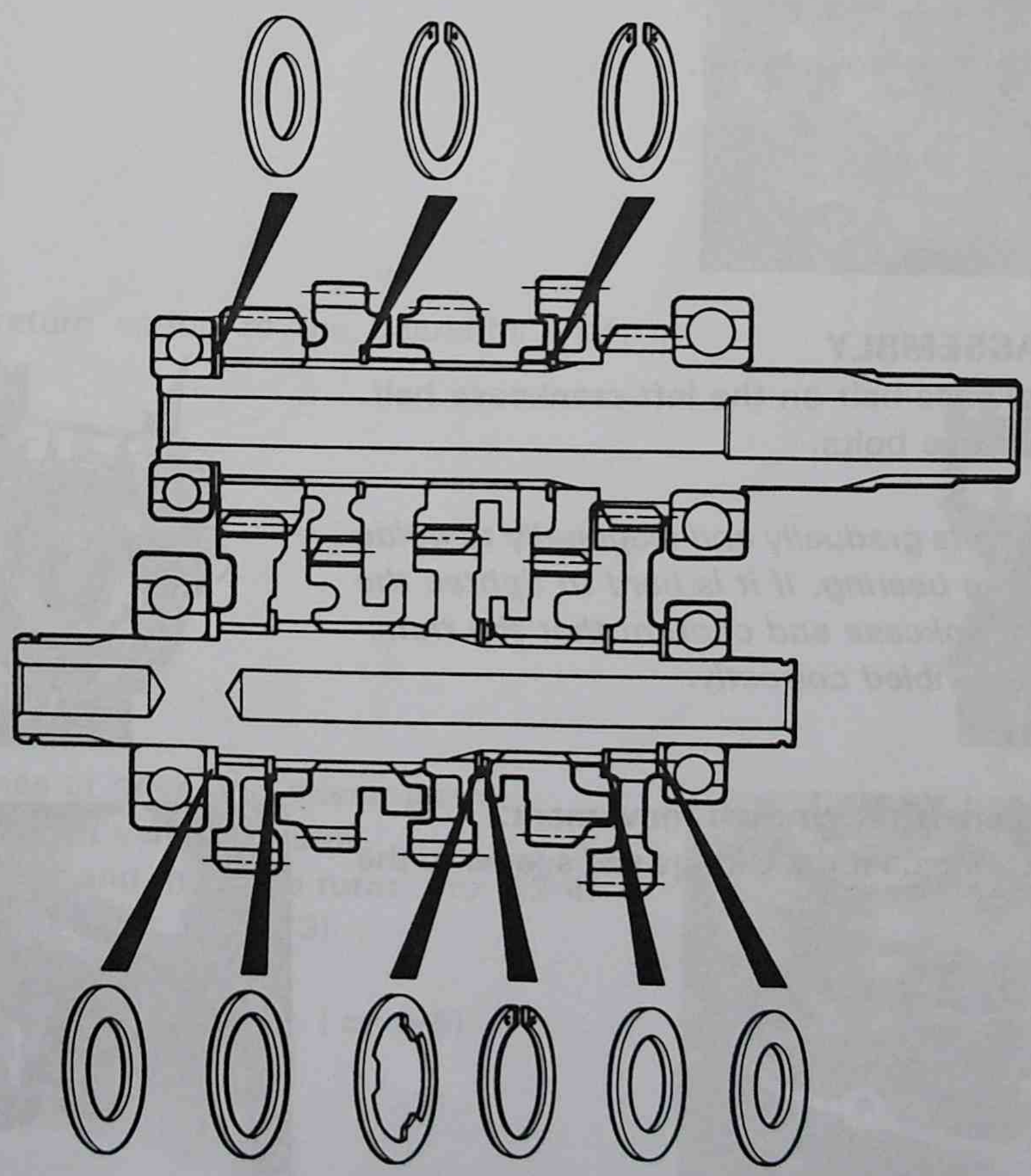

NOTE: Seat the circlip in the groove and locate its end as shown in the illustration.

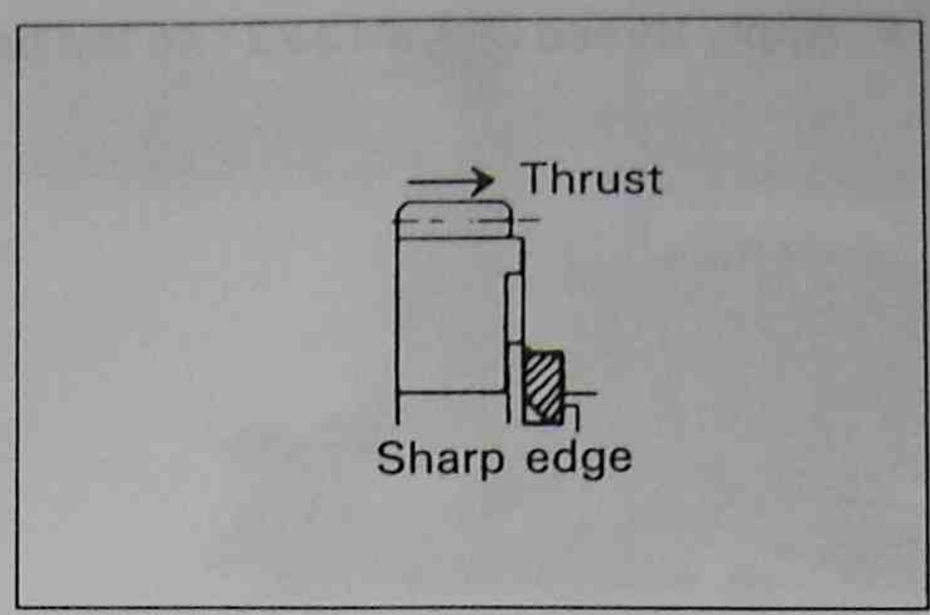

- Apply transmission oil to the following parts: driveshaft, countershaft, transmission gears, bearings, gearshift forks, gearshift shafts, gearshift cam.
- Reassemble the driveshaft and countershaft with gears installed.
- Reassemble the gearshift cam, shift forks and shafts.

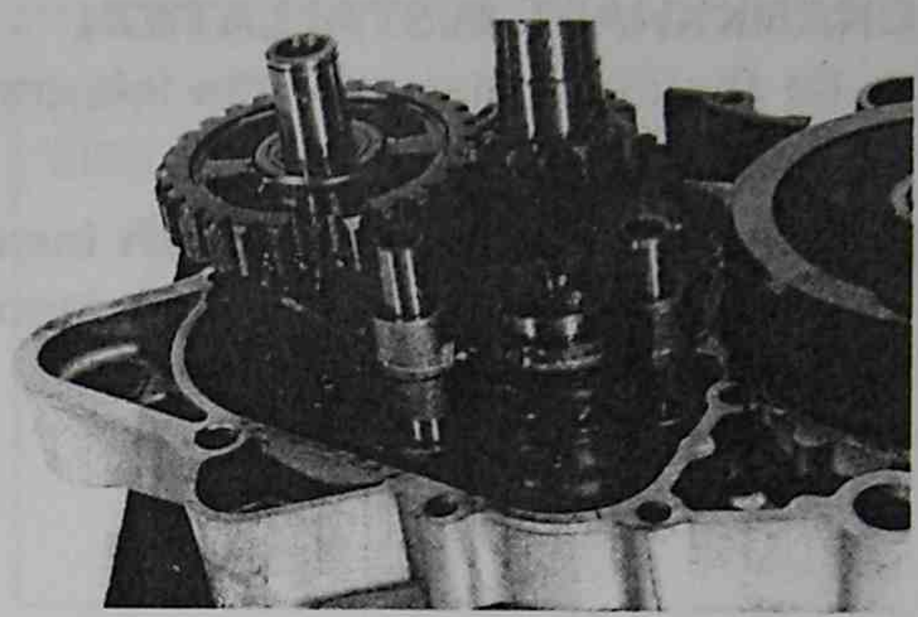

NOTE: Turn the gearshift cam to the neutral position and confirm that the driveshaft and countershaft turn without resistance.

- Fit the new gasket and dowel pins.

CRANKCASE REASSEMBLY

- Fit the right crankcase half on the left crankcase half.
- Tighten the crankcase bolts.

NOTE: Tighten the bolts gradually and diagonally to guide the crankshaft into the bearing. If it is hard to tighten the bolts, separate the crankcase and confirm that the transmission parts are assembled correctly.

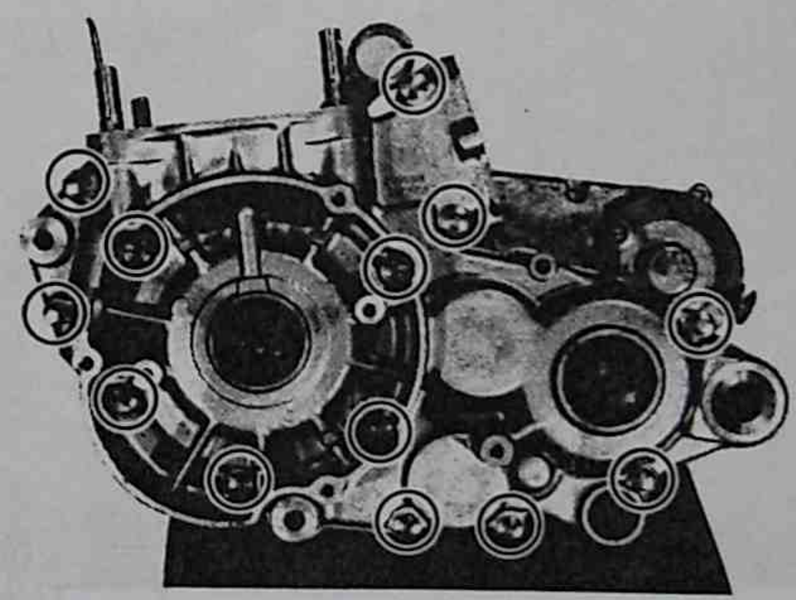

- Inspect the crankshaft for smooth movement.
- Apply grease to O-rings. Fit the O-rings and spacer to the driveshaft.

FUEL SYSTEM

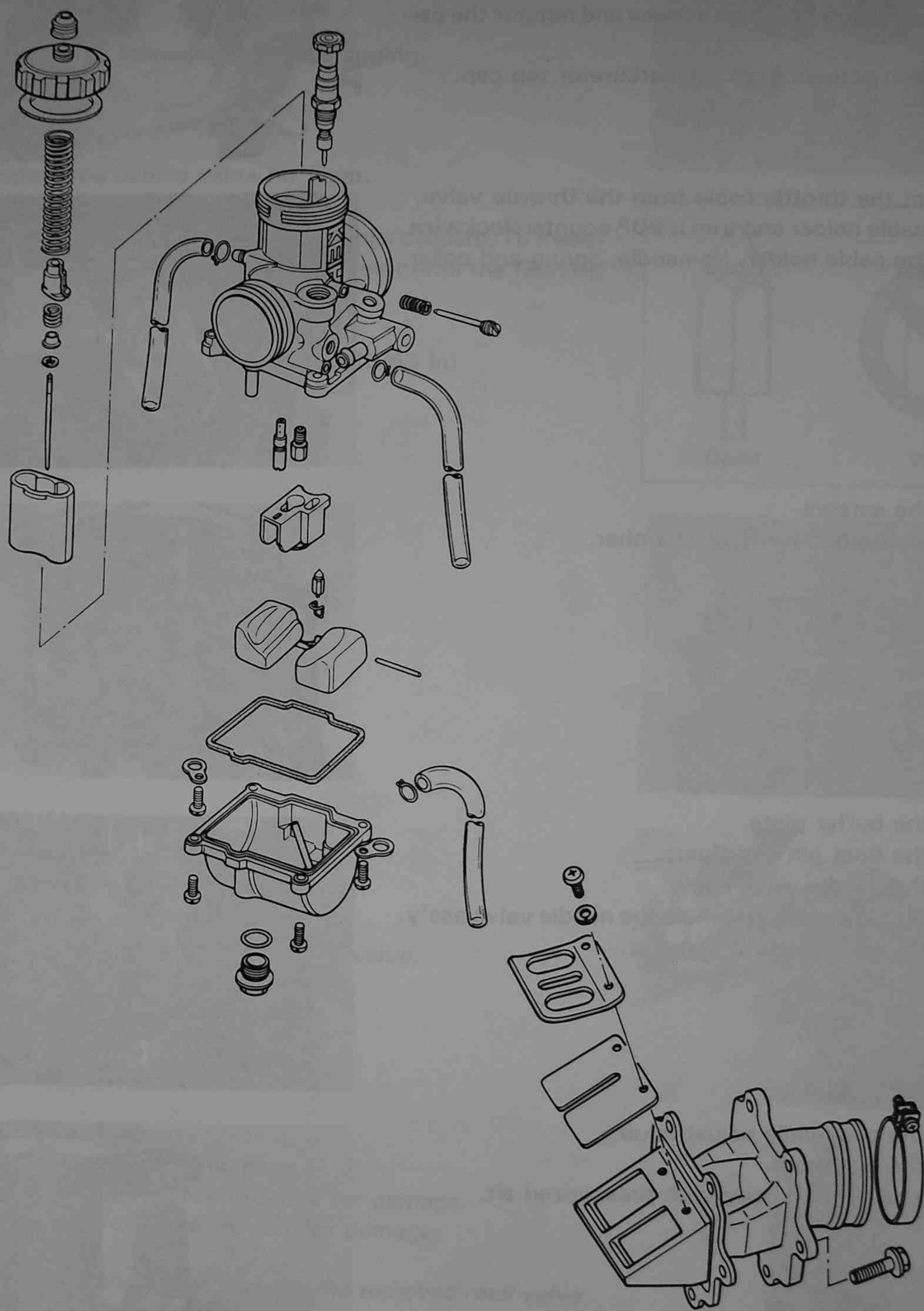

CARBURETOR

Carburetor Removal

- Turn the fuel valve to the "OFF" position and disconnect the fuel hose.
- Loosen the carburetor clamp screws and remove the carburetor.
- Remove two screws from the carburetor top cap.

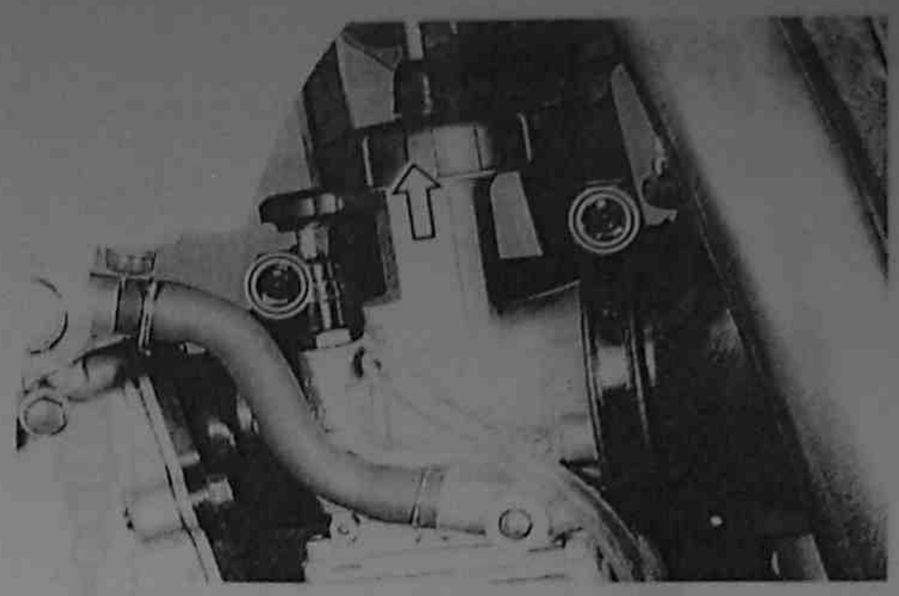

- Disconnect the throttle cable from the throttle valve.
- Push the cable holder and turn it 90° counterclockwise. Remove the cable holder, jet needle, spring and collar.

- Remove the screws.
- Remove the carburetor float chamber.

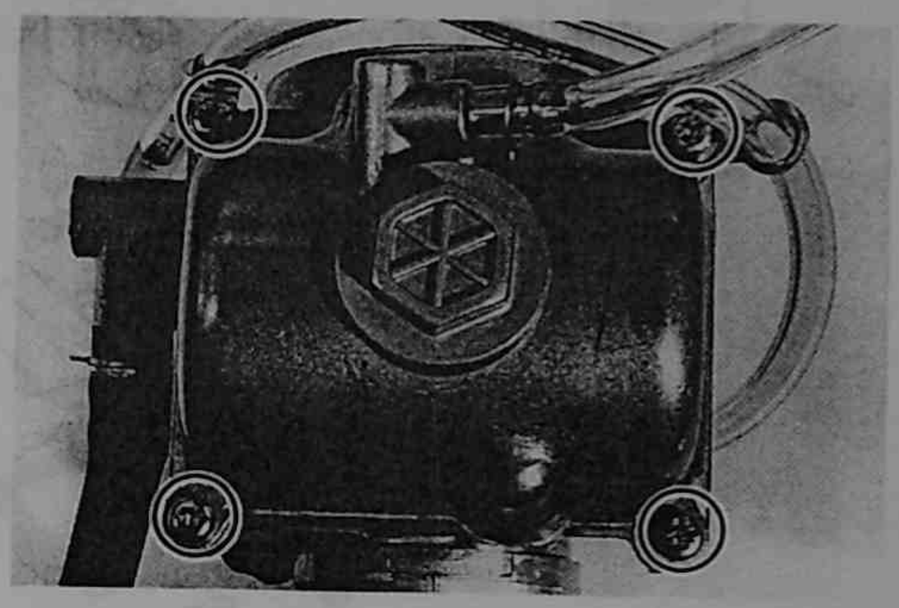

- Remove the buffer plate.
- Remove the float pin and floats.
- Remove the needle valve ass'y.
- Remove the pin and disassemble the needle valve ass'y.
- Remove the main jet, and slow jet.

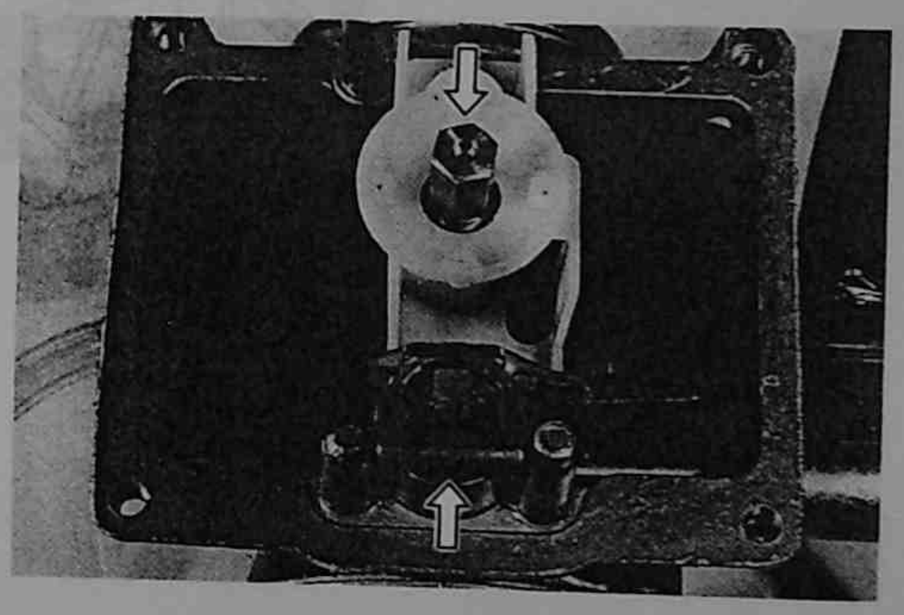

- Remove the choke/idle adjust knob.
- Remove the air screw.
- Clean the carburetor body with pressurized air.

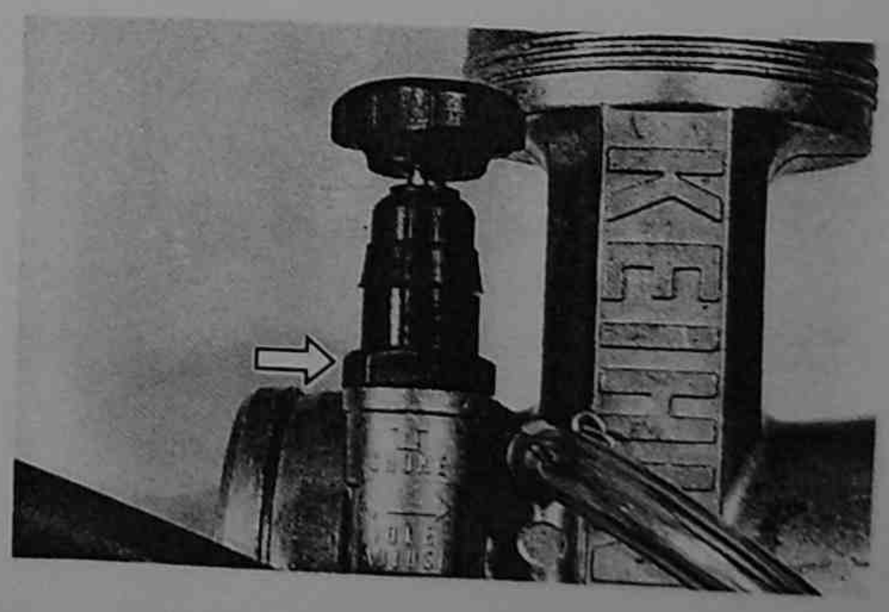

Carburetor Inspection

- Inspect the following parts for damage:
  Jet needle
  Throttle valve
  Float
- Inspect the following jets for clogging:
  Main jet
  Pilot jet
  Starter jet
- Inspect the needle valve for wear.

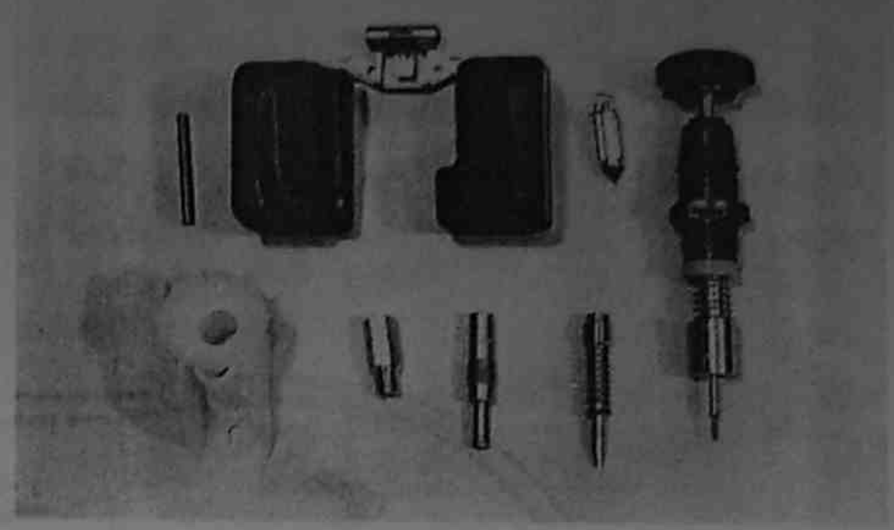

- Measure the float height with a vernier calipers. To measure the float height, tilt the carburetor until the float tip just contacts the float valve.

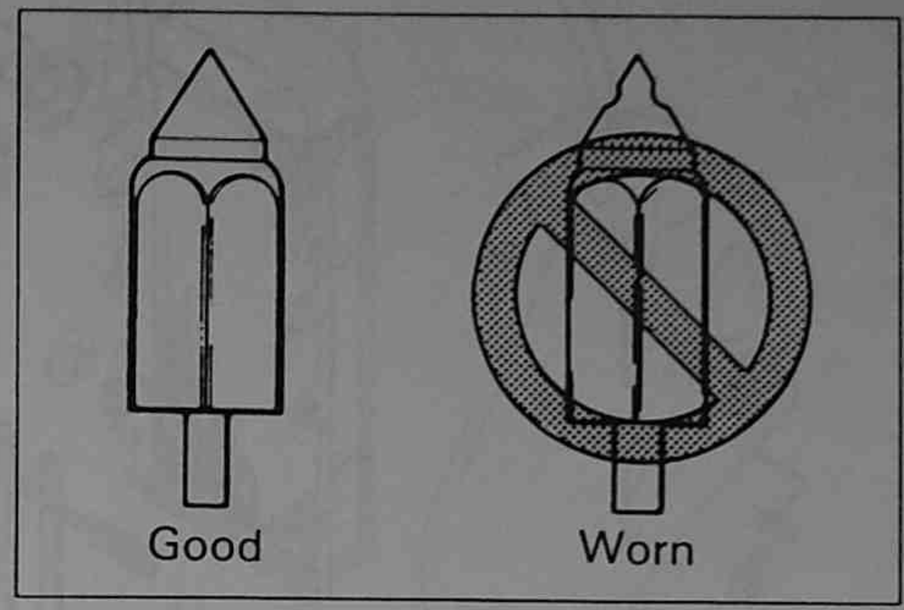

Standard float height: 16.0 mm (0.63 in)

Carburetor Reassembly

Reverse the sequence of removal.

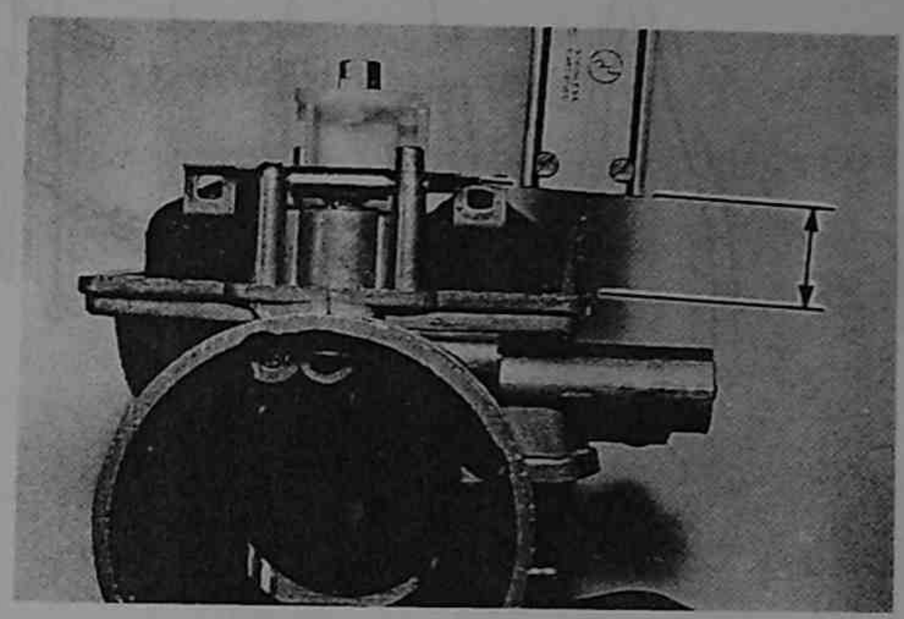

REED VALVE

Reed valve Removal

- Remove the carburetor. (☞ 10-2)
- Remove the six bolts.
- Remove the intake pipe and reed valve.

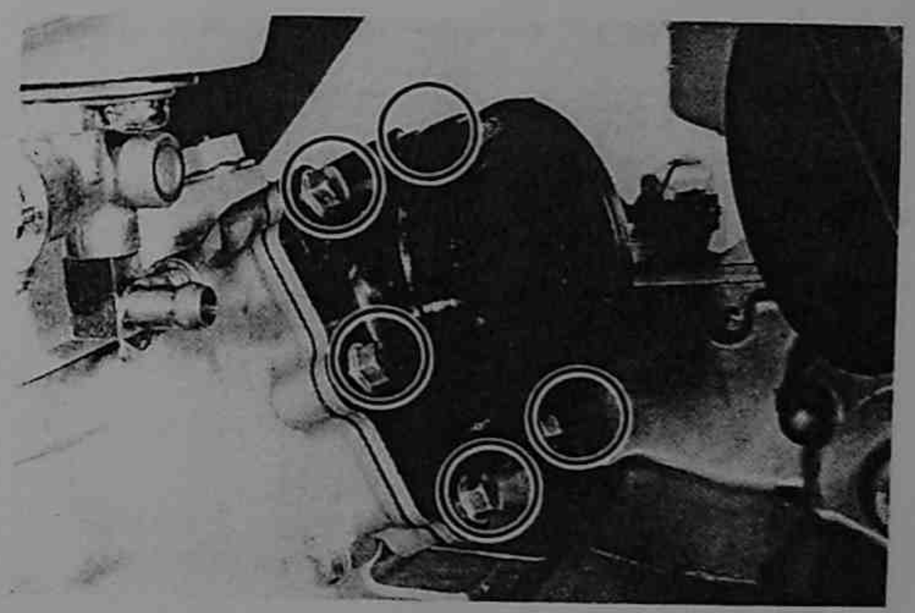

Reed Valve Inspection

- Inspect the reeds for damage.
- Inspect the reed valve stoppers for damage.
- Inspect the valve seat rubber for damage.

NOTE: Be careful not to damage the removed reed valve ass'y.

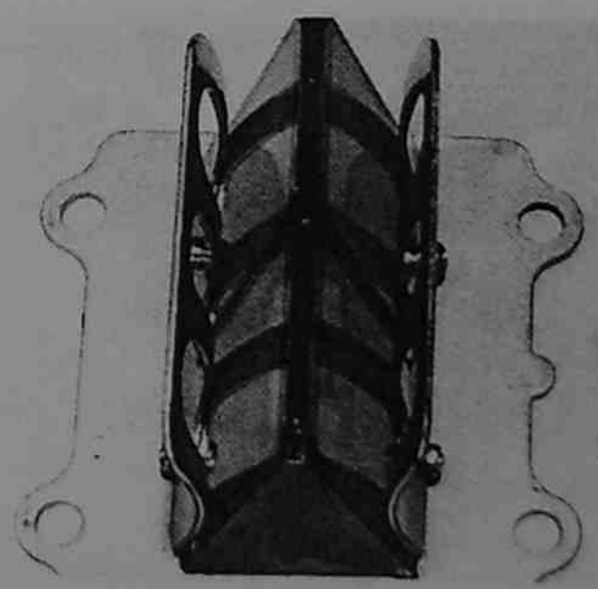

Reed Valve Reassembly

Reverse the sequence of removal.

COOLING SYSTEM

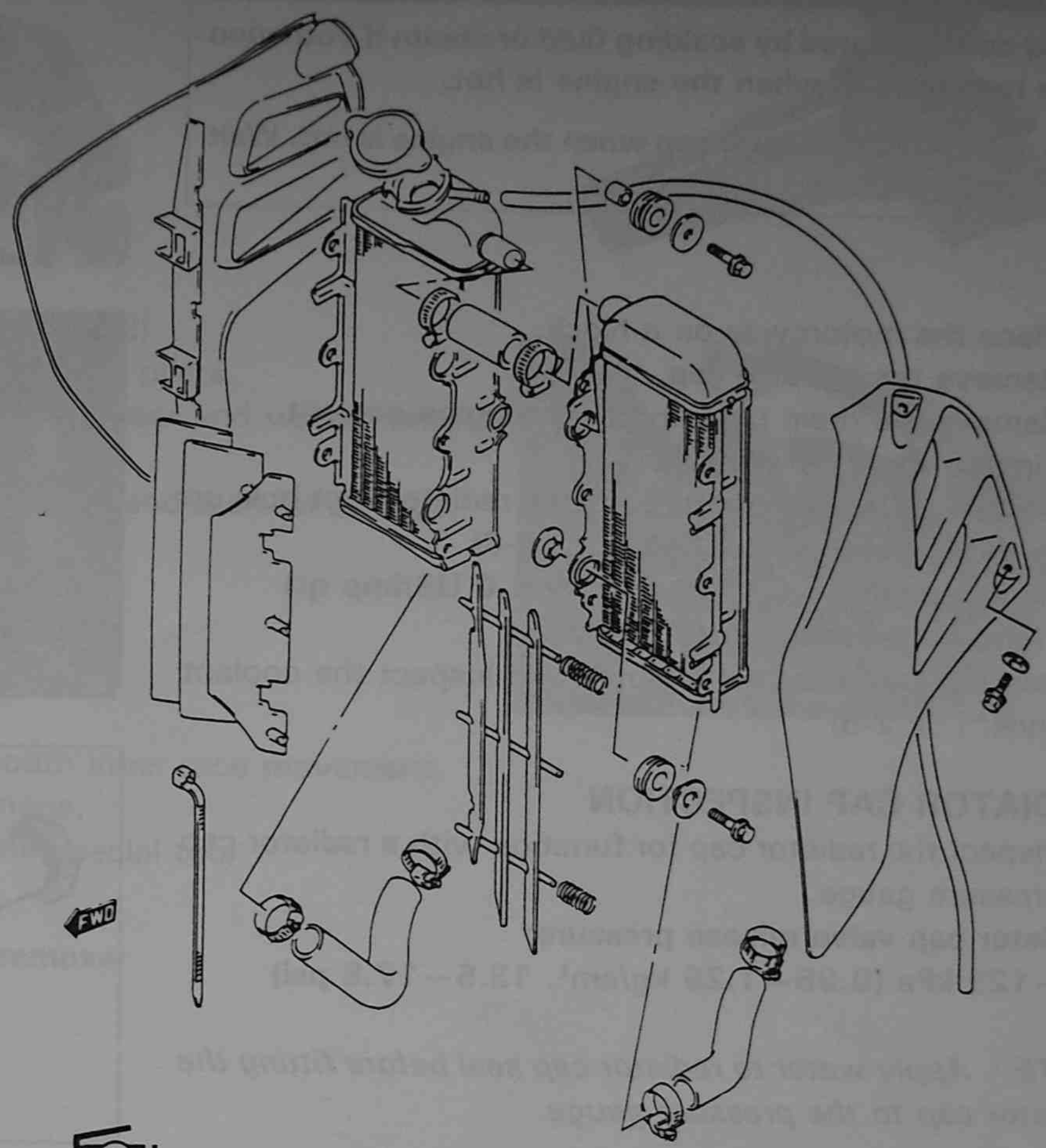

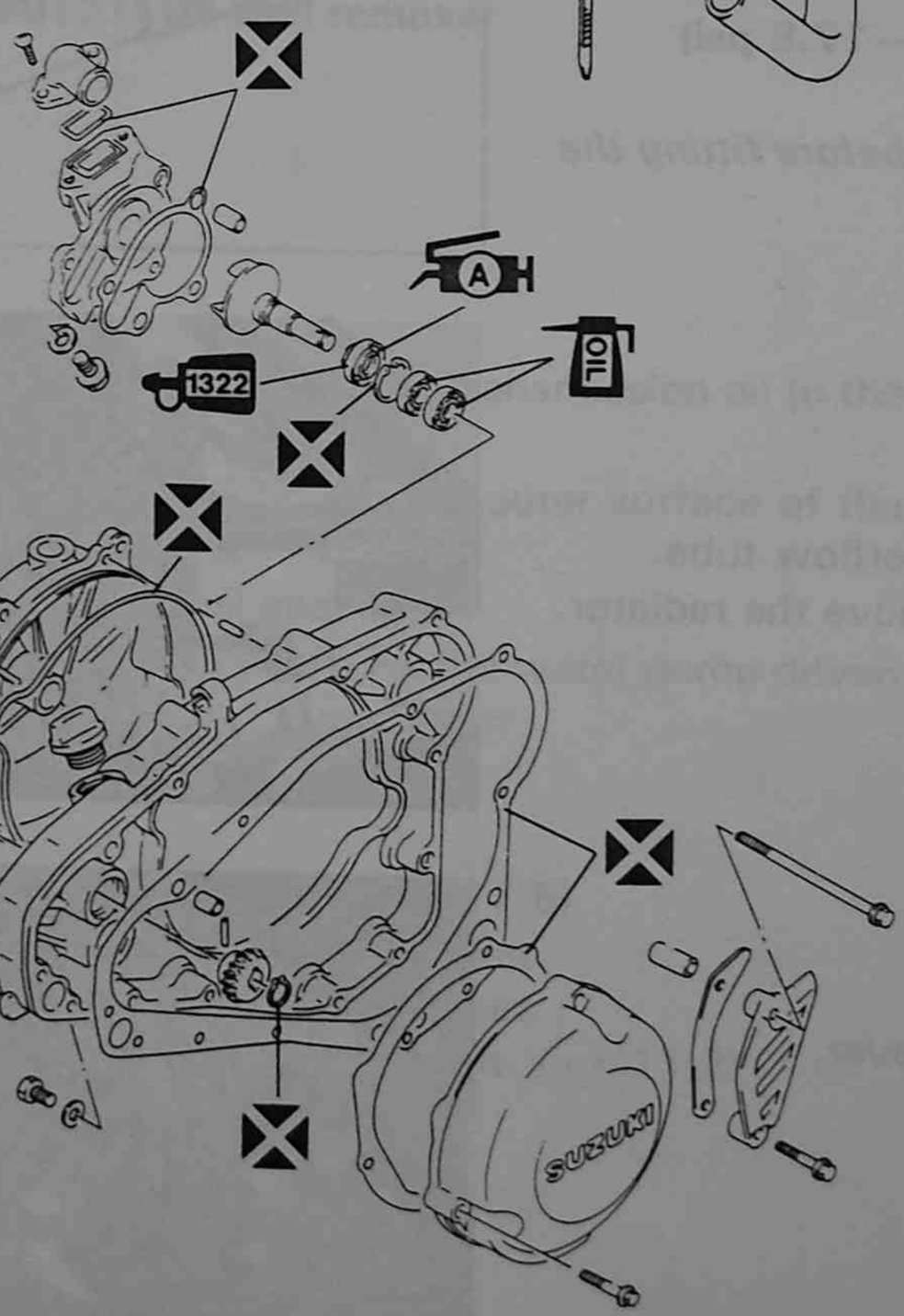

ENGINE COOLANT REPLACEMENT

⚠ WARNING

You can be injured by scalding fluid or steam if you open the radiator cap when the engine is hot.

Do not open the radiator cap when the engine is hot. Wait until engine cools.

- Place the motorcycle on a block.
- Remove the radiator cap.
- Remove the drain plug and drain engine coolant.
- Tighten the drain plug.
- Pour specified coolant through the radiator inlet hole up to the bottom of filler hole. (☞ 2-6)

Coolant capacity: 1100 ml (1.2/1.0 US/Imp qt)

- Tighten the radiator cap firmly.
- Run the engine a few minutes and inspect the coolant level. (☞ 2-5)

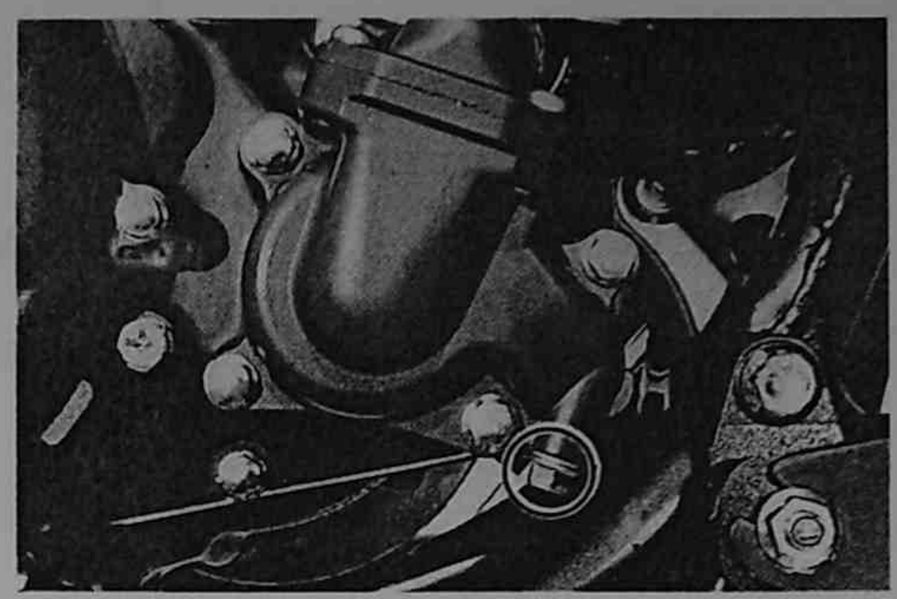

RADIATOR CAP INSPECTION

- Inspect the radiator cap for function with a radiator cap pressure gauge.

Radiator cap valve release pressure:
95–125 kPa (0.95–1.25 kg/cm², 13.5–17.8 psi)

NOTE: Apply water to radiator cap seal before fitting the radiator cap to the pressure gauge.

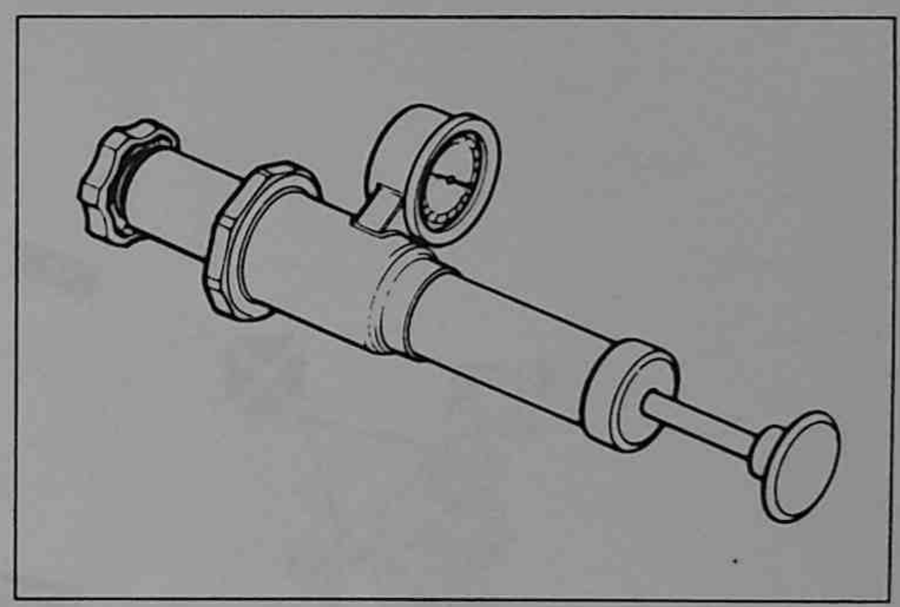

RADIATOR

Removal

- Remove the seat and fuel tank.
- Drain engine coolant.
- Disconnect the radiator hoses and overflow tube.
- Remove the radiator fitting bolts. Remove the radiator.

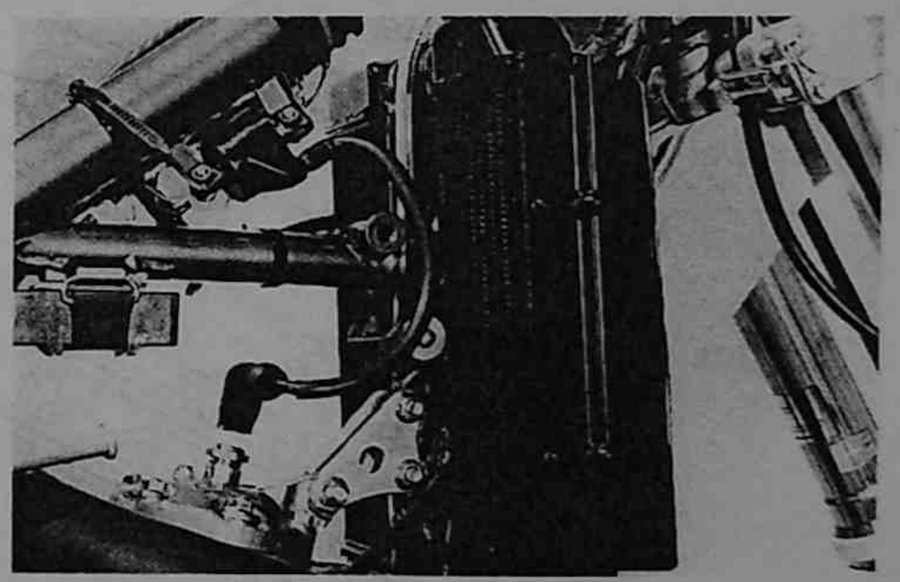

Reassembly

Reverse the sequence of removal.

WATER PUMP

Removal

- Drain engine coolant. (☞ 11-2)
- Remove the bolts and water pump cover.

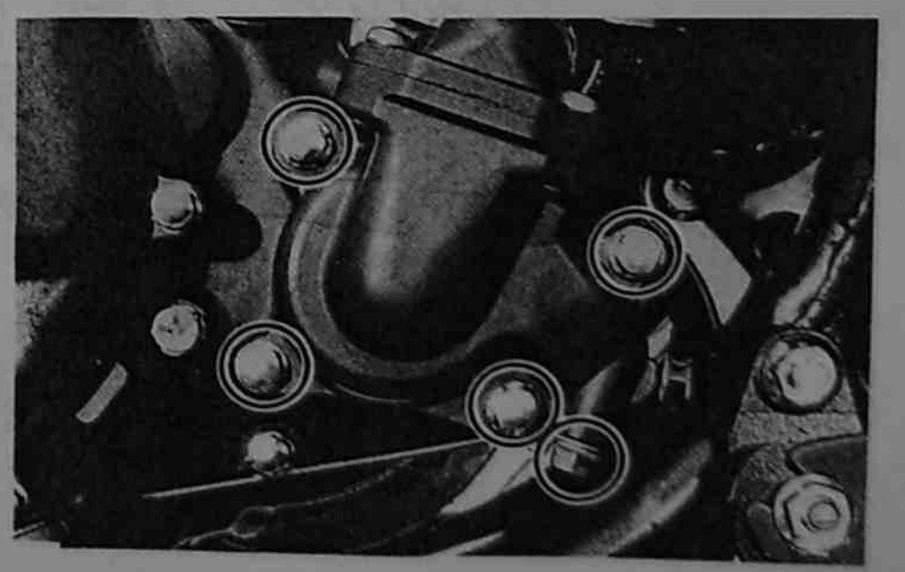

- Remove the gasket and dowel pins.
- Inspect the impeller for damage.

- Remove the clutch cover. (☞ 7-2)
- Remove the circlip with snap ring pliers.
- Remove the water pump driven gear and water pump shaft.
- Inspect the water pump driven gear and shaft for damage.

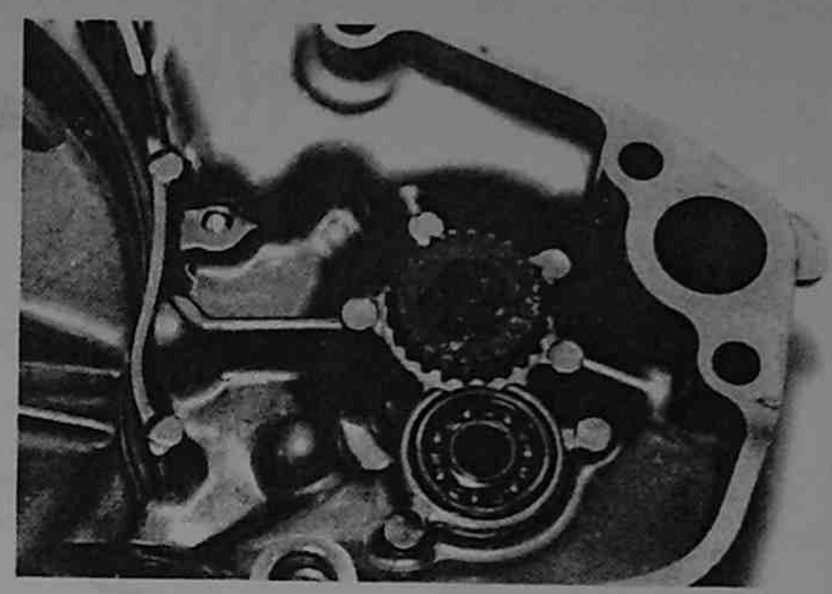

- Inspect the bearing for smooth inner race movement.
- Inspect the oil seal for damage.
- Remove the oil seal with the special tool.
- Remove the bearing.

TOOL **09913-50121: Oil seal remover**

Reassembly

- Fit the bearing and circlip. Apply transmission oil to the bearing.
- Apply thread lock "1322" to the outer surface of the oil seal. Fit the oil seal.
- Apply grease to the oil seal lip.
- Insert the water pump shaft. Fit the water pump driven gear and circlip.

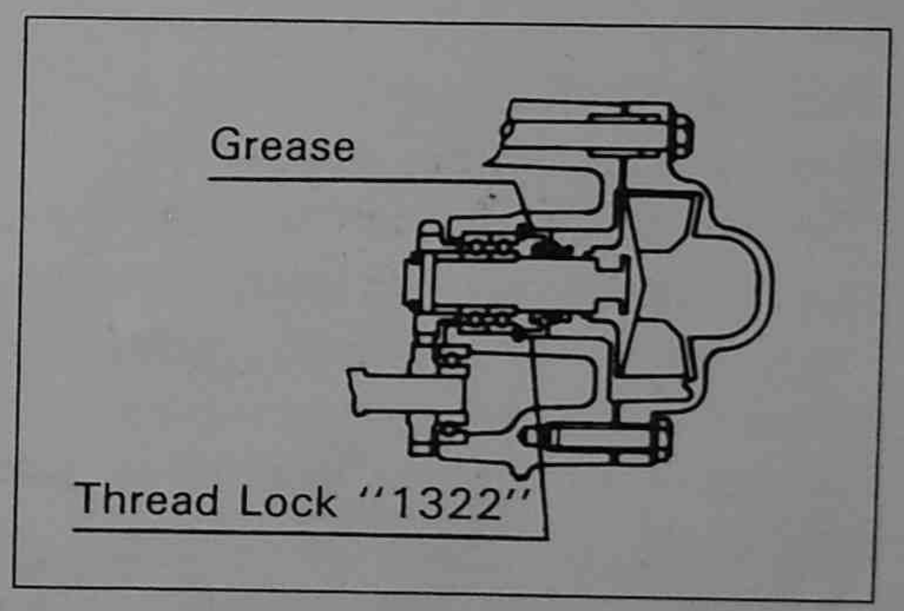

- Reassemble the clutch cover. (☞ 7-5)
- Reassemble the water pump impeller.
- Fit the dowel pins and a new gasket.
- Fill the radiator with engine coolant. (☞ 11-2)

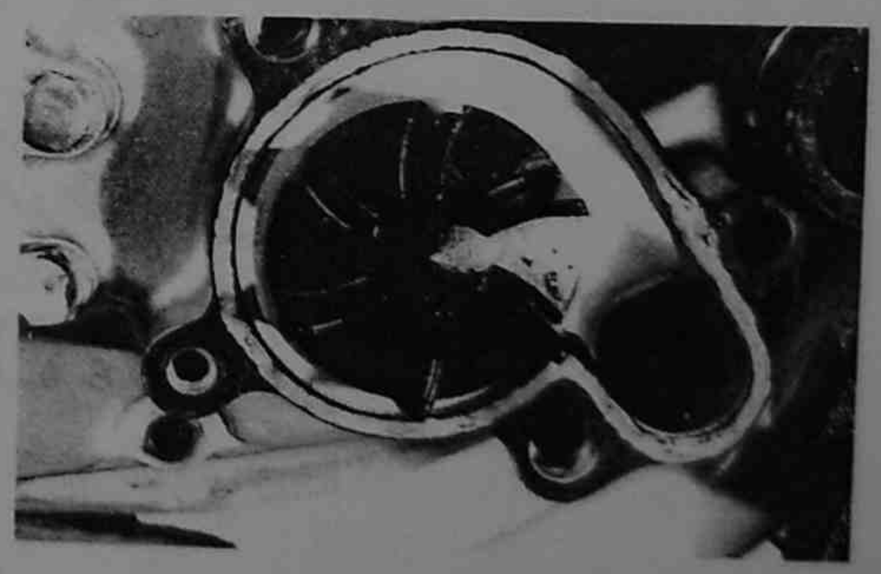

ELECTRICAL SYSTEM

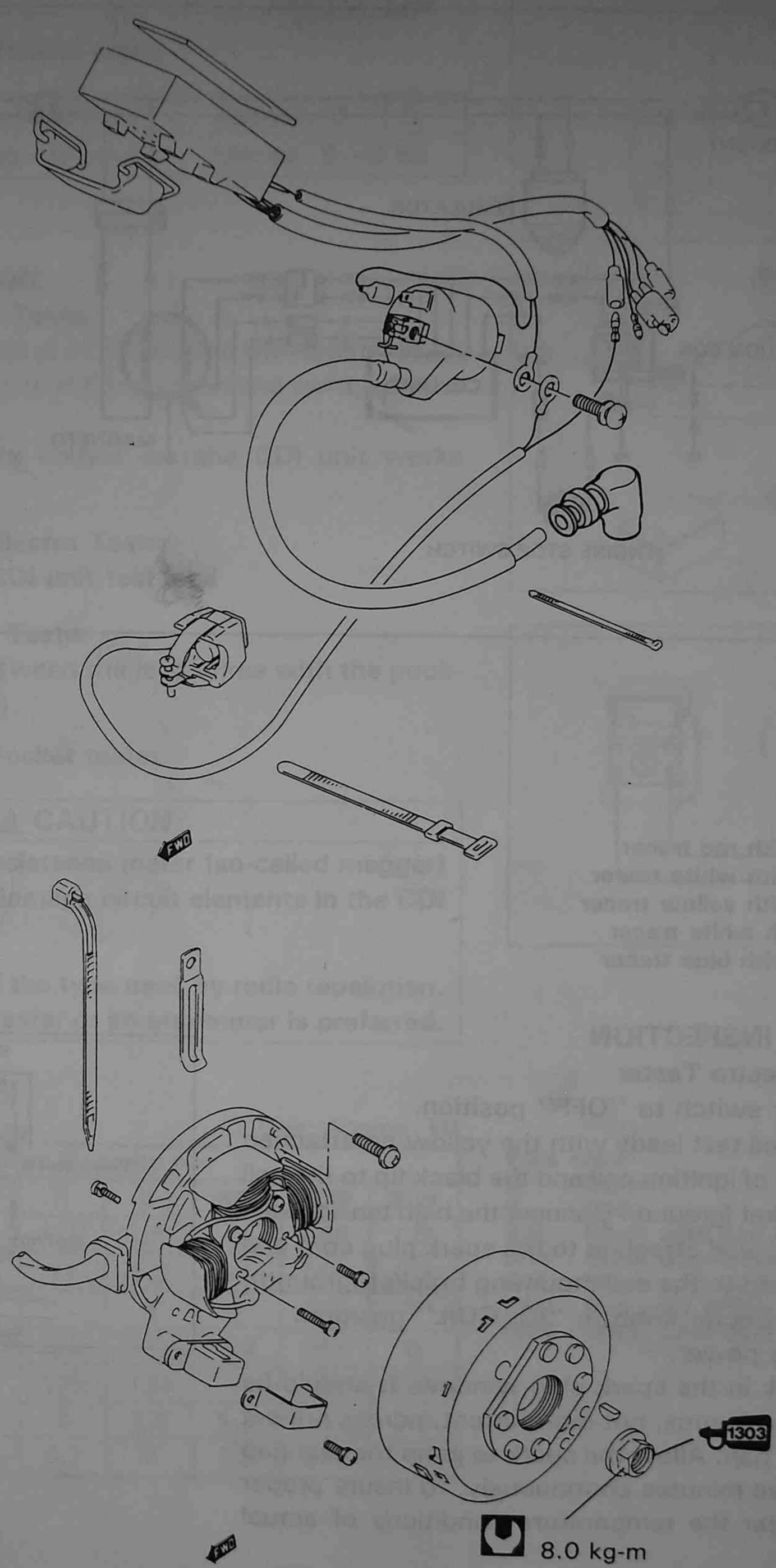

ELECTRICAL CIRCUIT

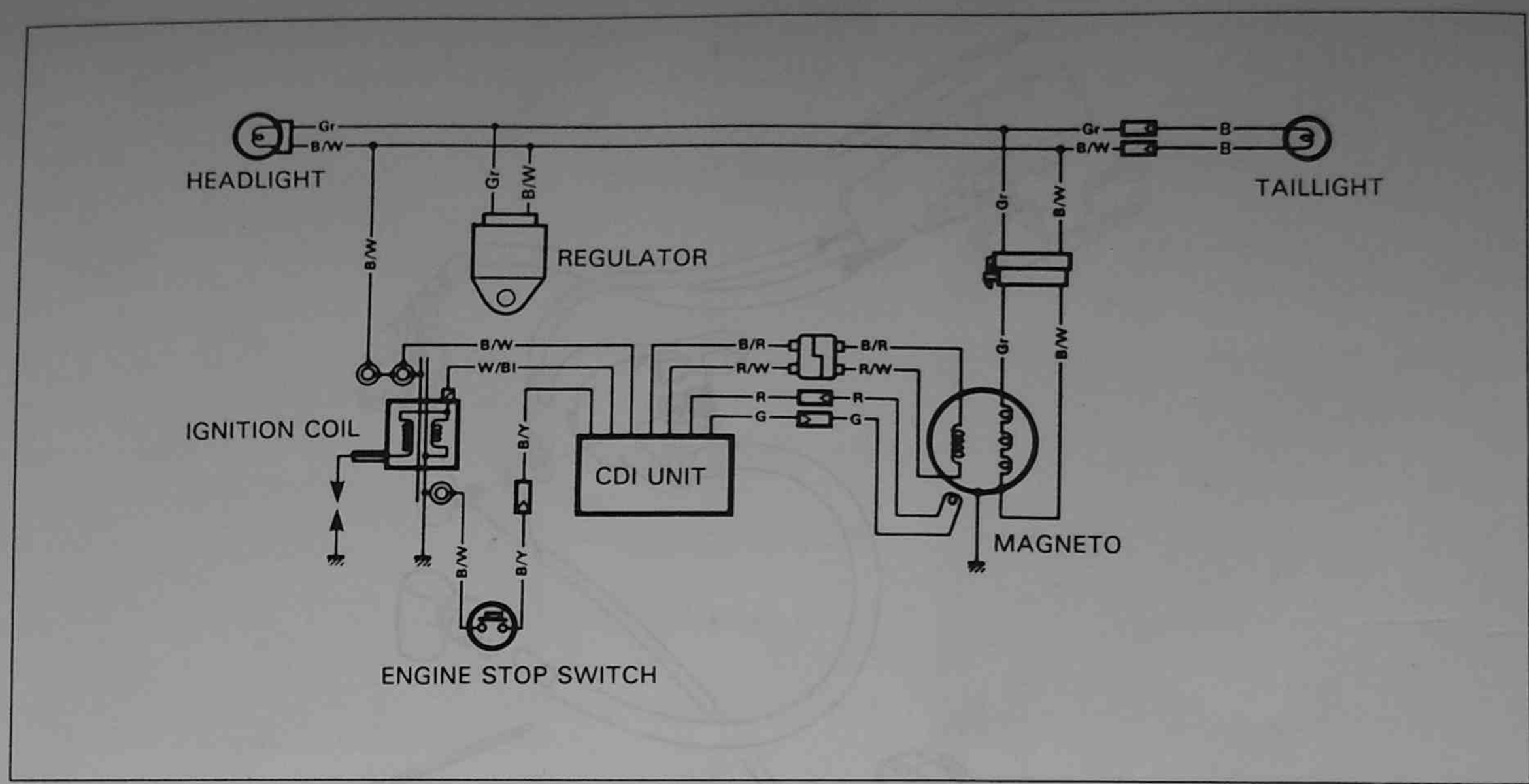

Color code:

B	:	Black
G	:	Green
Gr	:	Gray
R	:	Red
B/R	:	Black with red tracer
B/W	:	Black with white tracer
B/Y	:	Black with yellow tracer
R/W	:	Red with white tracer
W/Bl	:	White with blue tracer

IGNITION COIL INSPECTION

Checking with Electro Tester

- Set the power switch to "OFF" position.
- Connect the coil test leads with the yellow tip attached to the terminal of ignition coil and the black tip to the coil mounting bracket (ground). Connect the high tension lead with the red ⊕ lead attached to the spark plug cord and the black ⊖ lead to the coil mounting bracket (ground).
- Set the test selector knob to "IG. COIL" position.
- Switch on the power.
- Note the spark in the spark plug window. It should be strong and continuous, not intermittent, across pre-set 8 mm (0.3 in) gap. Allow the spark to jump the test gap for at least five minutes continuously, to insure proper operation under the temperature conditions of actual riding.

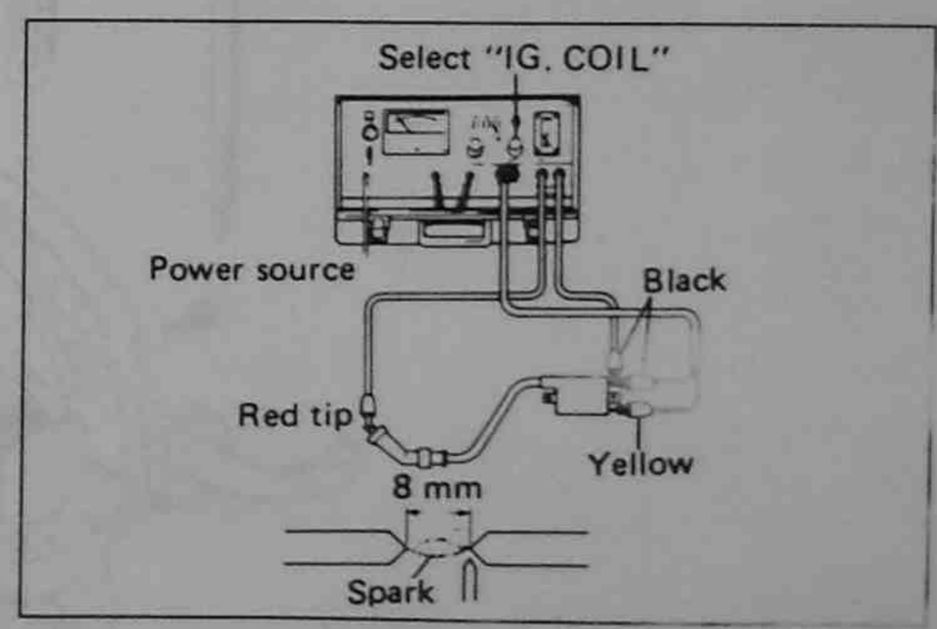

TOOL **09900-28106: Electro tester**

Checking with Pocket Tester

Measure the ignition coil electrical resistance with the pocket tester.

TOOL 09900-25002: Pocket tester

Primary	Terminal—Ground	Approx. 0—1 Ω
Secondary	Plug cap—Ground	Approx. 5—8 kΩ

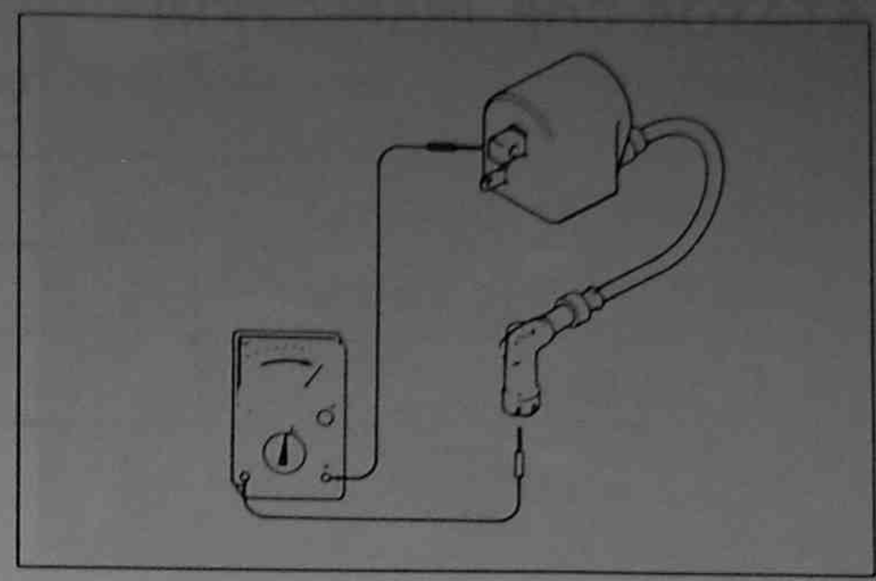

CDI UNIT INSPECTION

Checking with Electro Tester

- Connect the test leads to a CDI unit and the electro tester.
- Set the selector knob to P.E.I. position and switch on the power.
- If the indicator light comes on, the CDI unit works properly.

TOOL 09900-28108: Electro Tester
09930-70210: CDI unit test lead

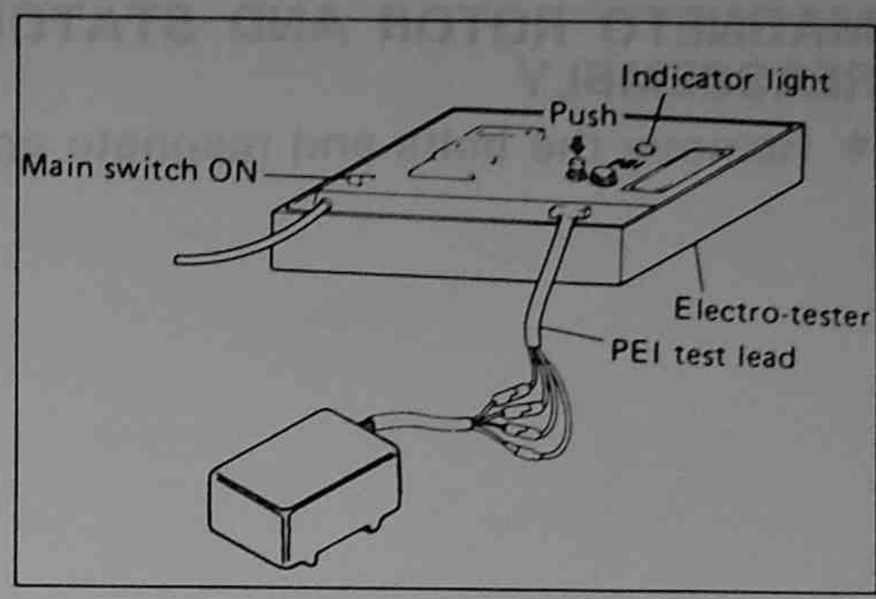

Checking with Pocket Tester

Measure resistance between the lead wires with the pocket tester (× 1kΩ range).

TOOL 09900-25002: Pocket tester

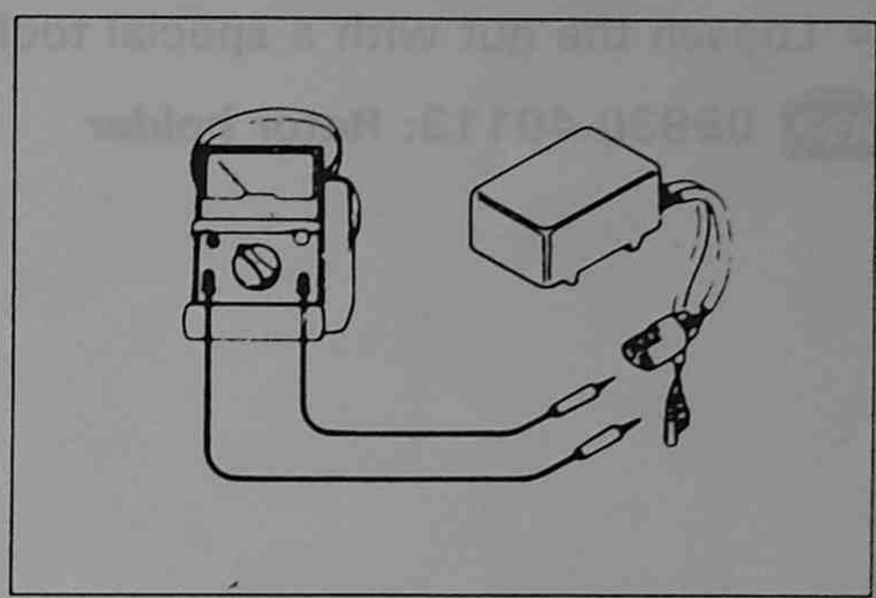

⚠ CAUTION

Using an insulation-resistance meter (so-called megger) for this purpose can damage circuit elements in the CDI unit.

Use a circuit tester of the type used by radio repairmen. A High-grade circuit tester or an ohmmeter is preferred.

Unit: Approx. kΩ

Negative ⊖ probe pin \ Positive ⊕ probe pin	B/R	R/W	R	G	B/Y	W/Bl	B/W
B/R		170	125	120	0	OFF	125
R/W	14		11	6.2	14	OFF	6.2
R	7	7		3	7	OFF	3
G	2.8	2.8	3.2		2.8	OFF	0
B/Y	0	170	125	125		OFF	125
W/Bl	8	8	7	2.6	8.2		2.6
B/W	2.8	2.8	3.2	0	2.8	OFF	

Wire color
G : Green
R : Red
B/R : Black with Red tracer
B/W : Black with White tracer
B/Y : Black with Yellow tracer
R/W : Red with White tracer
W/Bl : White with Blue tracer

STATOR COIL INSPECTION

Measure the stator coils electrical resistance.

Gray—Black/White	0—1 Ω
Black/Red—Red/White	90—130 Ω
Red—Green	80—120 Ω

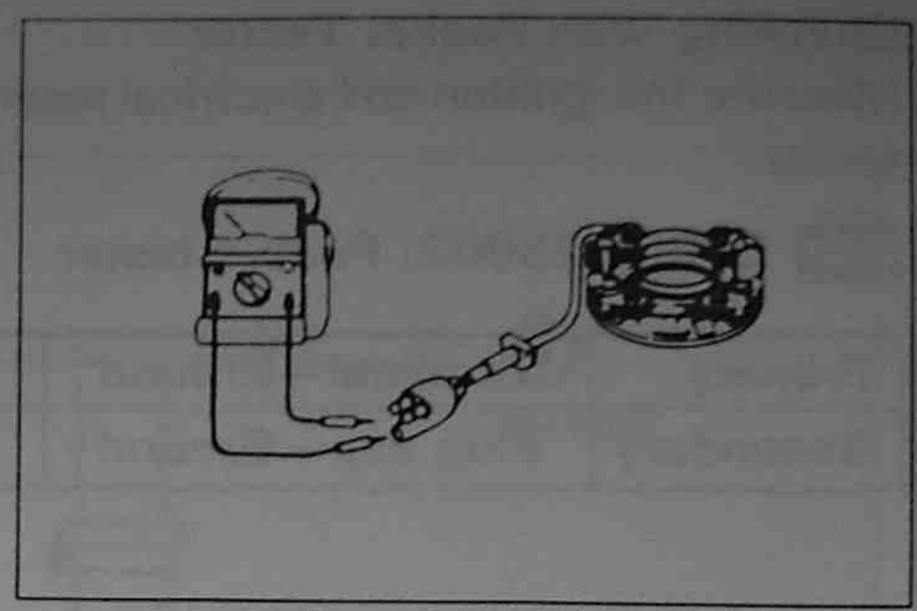

MAGNETO ROTOR AND STATOR REMOVAL AND REASSEMBLY

- Remove the bolts and magneto cover.

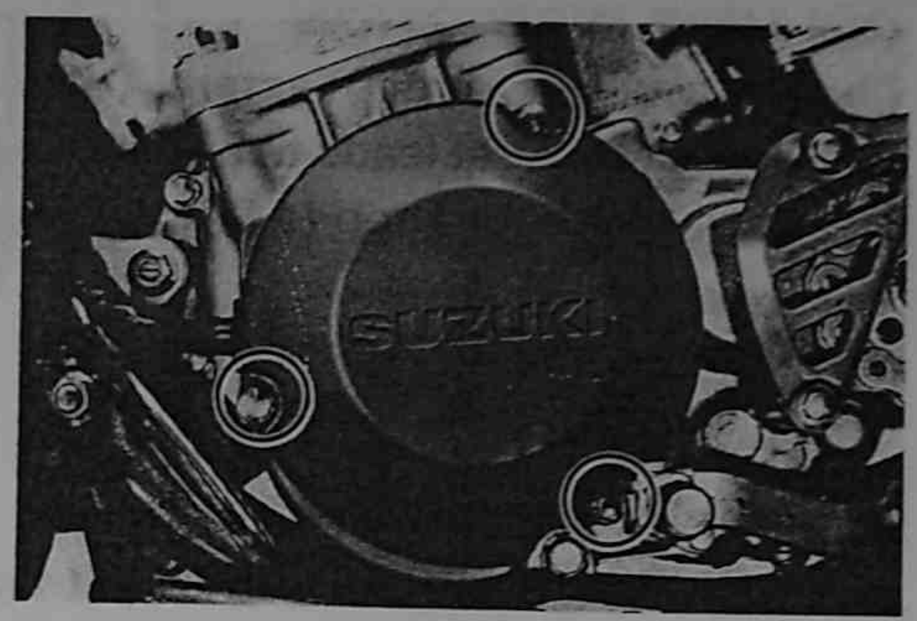

- Loosen the nut with a special tool.

TOOL 09930-40113: Rotor holder

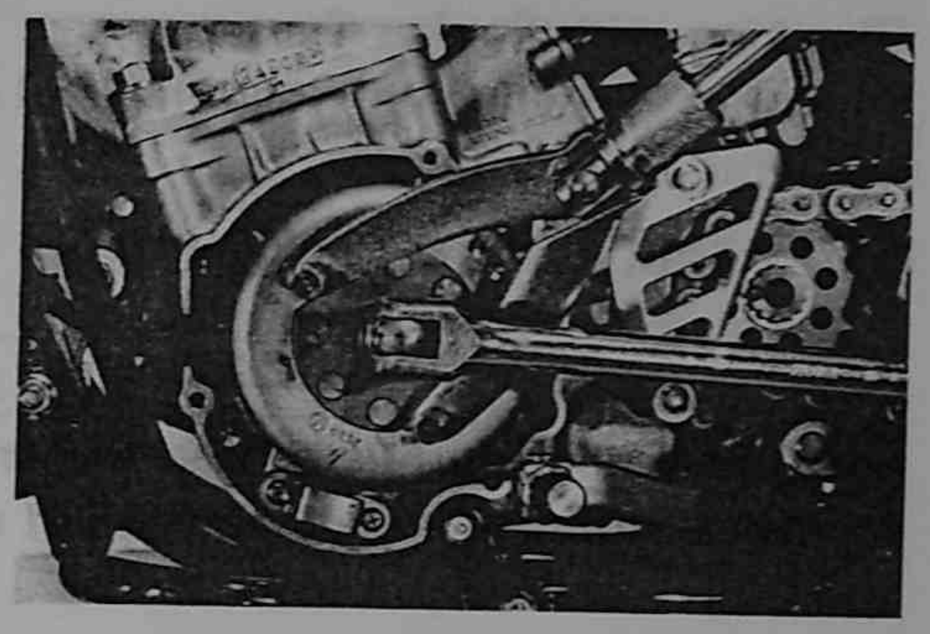

- Remove the magneto rotor with the special tool. Remove the key.

TOOL 09930-30113: Flywheel rotor remover

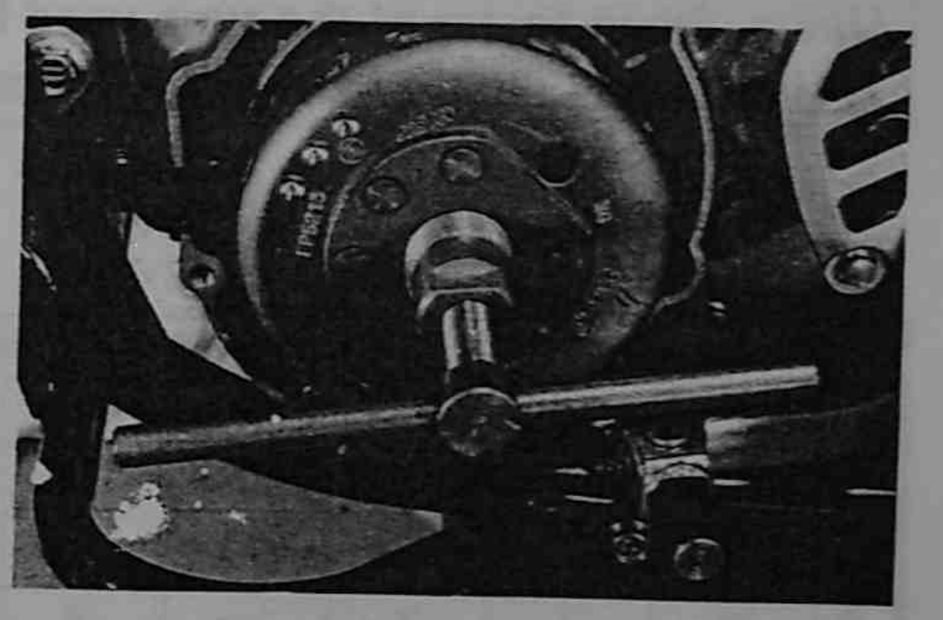

- Remove the screws and stator. Disconnect the lead wires.

Magneto Rotor and Stator Reassembly

- Align the line on the stator and triangle mark on the crankcase to set the ignition timing correctly.

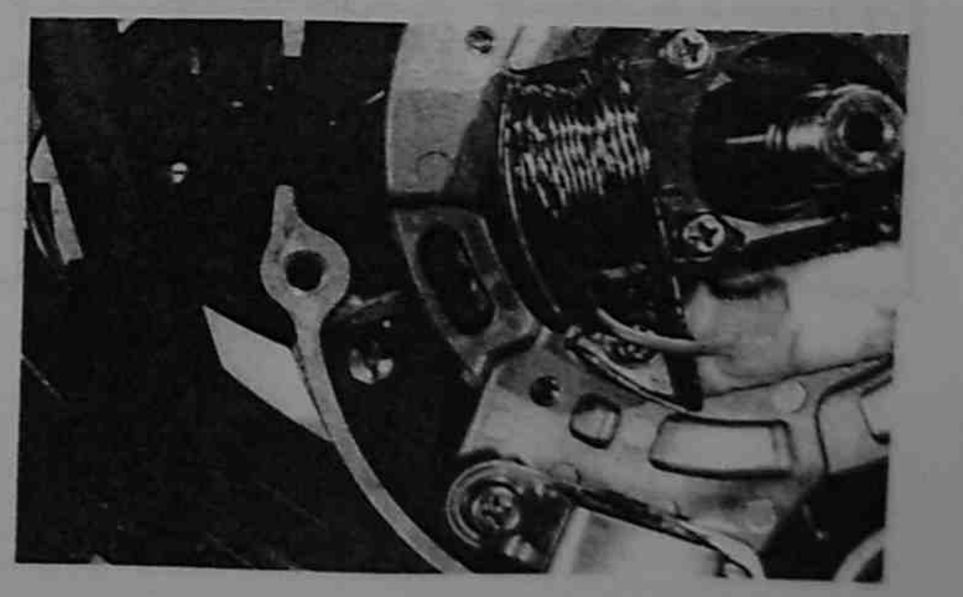

- Fit the key into the crankshaft.
- Fit the magneto rotor.
- Apply thread lock super "1303" to the nut and tighten the nut to the specified torque with the special tool.

TOOL 09930-40113: Rotor holder

Magneto rotor nut: 80 N·m (8.0 kg-m, 58.0 lb-ft)

- Reassemble the magneto cover.

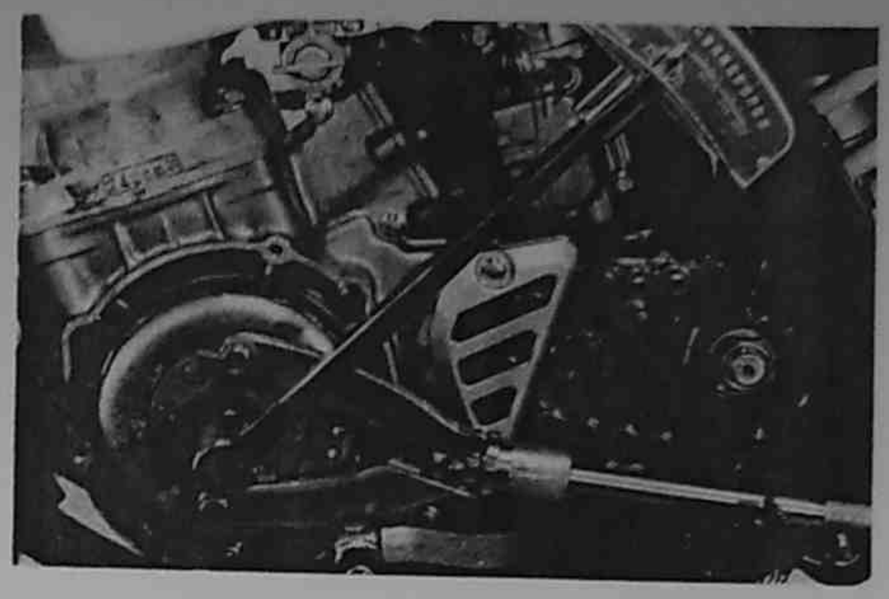

FRONT AND REAR WHEELS

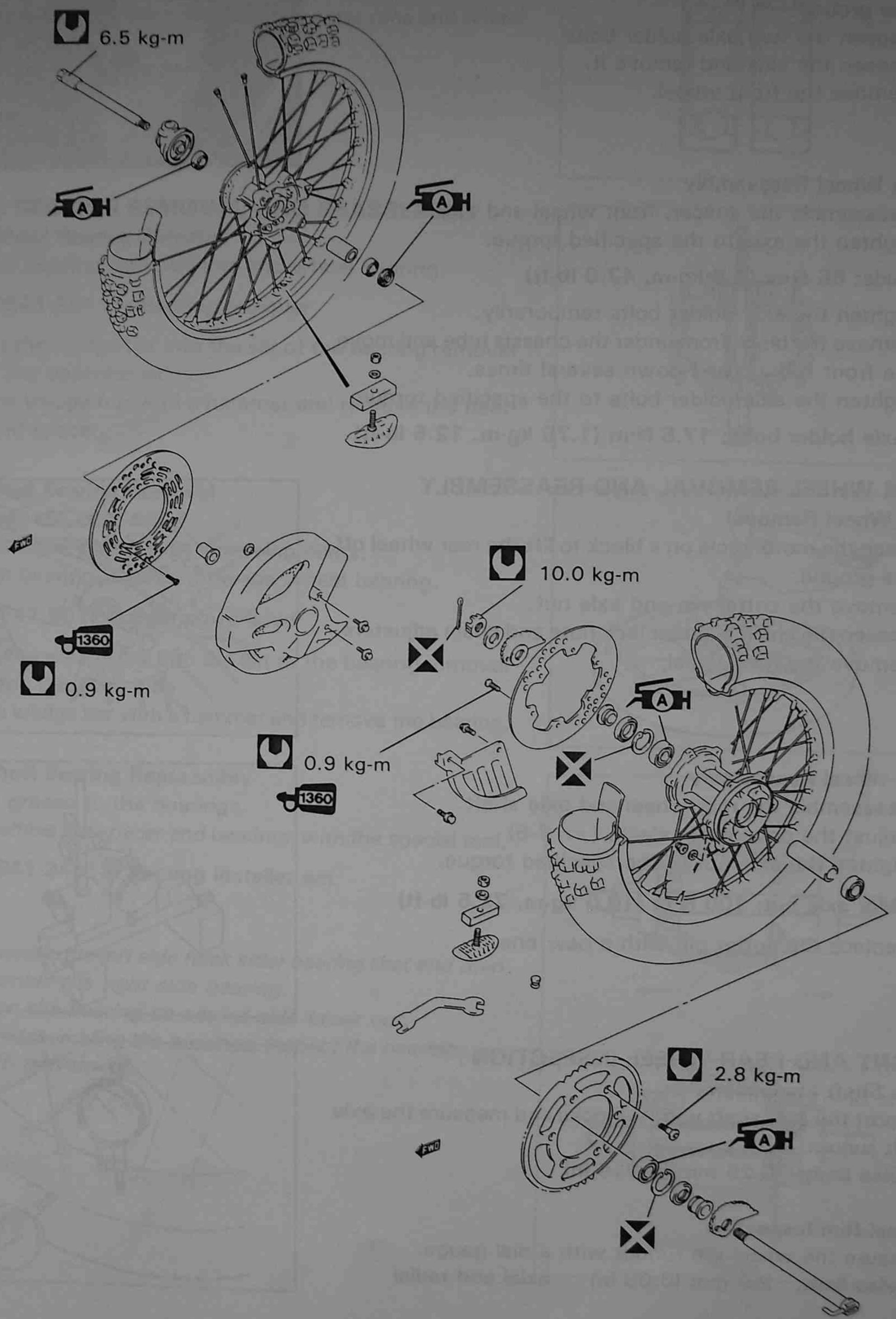

FRONT WHEEL DISASSEMBLY AND REASSEMBLY

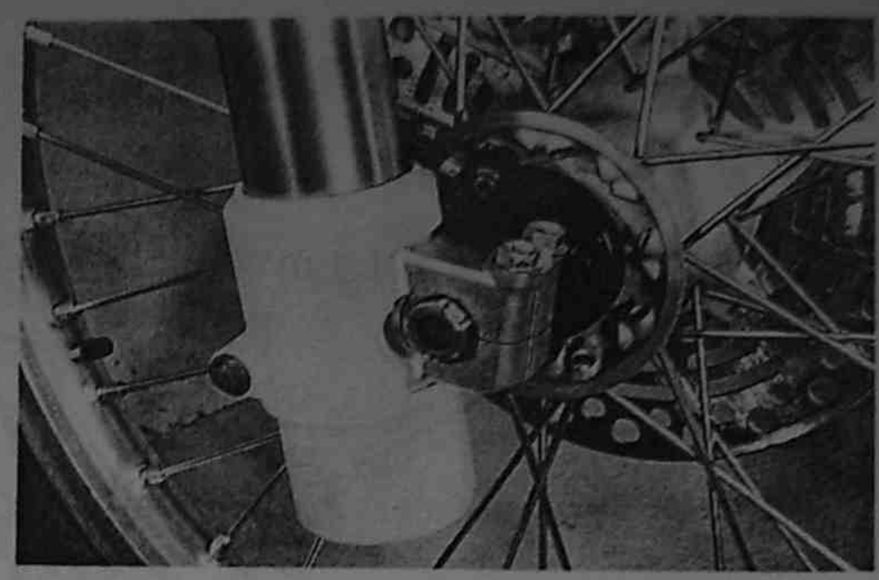

Front wheel Removal

- Place the motorcycle on a block to lift front wheel off the ground.
- Loosen the two axle holder bolts.
- Loosen the axle and remove it.
- Remove the front wheel.

Front Wheel Reassembly

- Reassemble the spacer, front wheel and axle.
- Tighten the axle to the specified torque.

Axle: 65 N·m (6.5 kg-m, 47.0 lb-ft)

- Tighten the axle holder bolts temporarily.
- Remove the block from under the chassis tube and move the front fork up and down several times.
- Tighten the axle holder bolts to the specified torque.

Axle holder bolts: 17.5 N·m (1.75 kg-m, 12.5 lb-ft)

REAR WHEEL REMOVAL AND REASSEMBLY

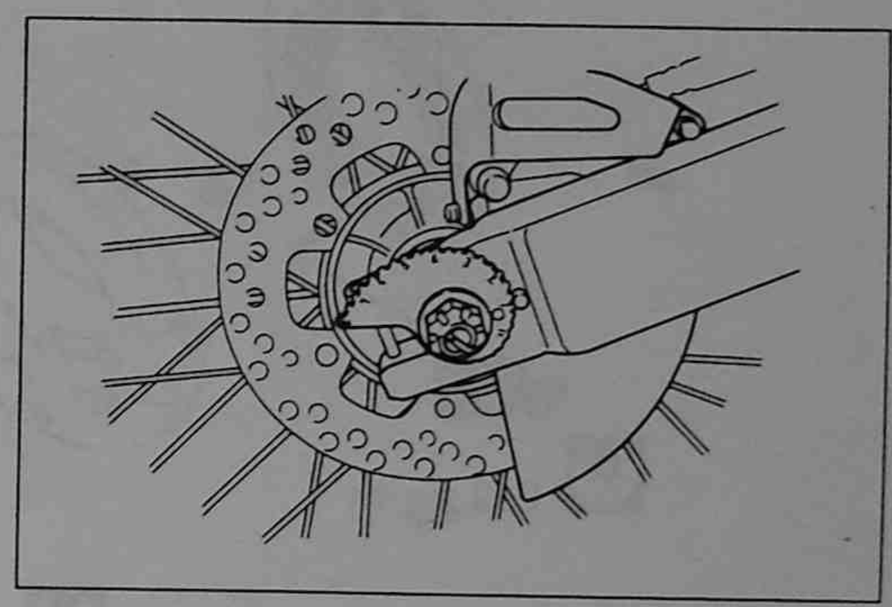

Rear Wheel Removal

- Place the motorcycle on a block to lift the rear wheel off the ground.
- Remove the cotter pin and axle nut.
- Loosen the chain adjuster lock nuts and chain adjusters.
- Remove the rear wheel.

Rear Wheel Reassembly

- Reassemble the rear wheel and axle shaft.
- Adjust the drive chain slack. (☞ 2-8)
- Tighten the axle nut to the specified torque.

Rear axle nut: 100 N·m (10.0 kg-m, 72.5 lb-ft)

- Replace the cotter pin with a new one.

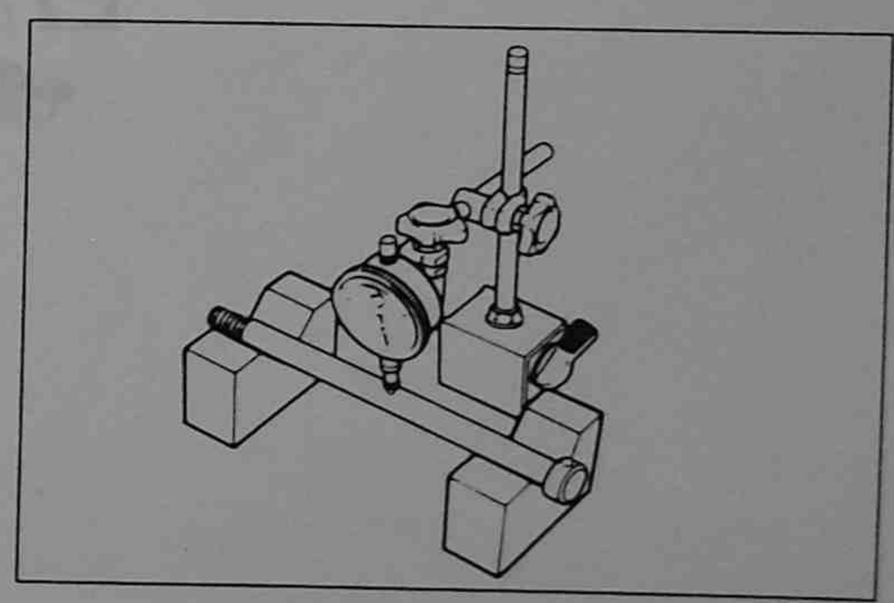

FRONT AND REAR WHEEL INSPECTION

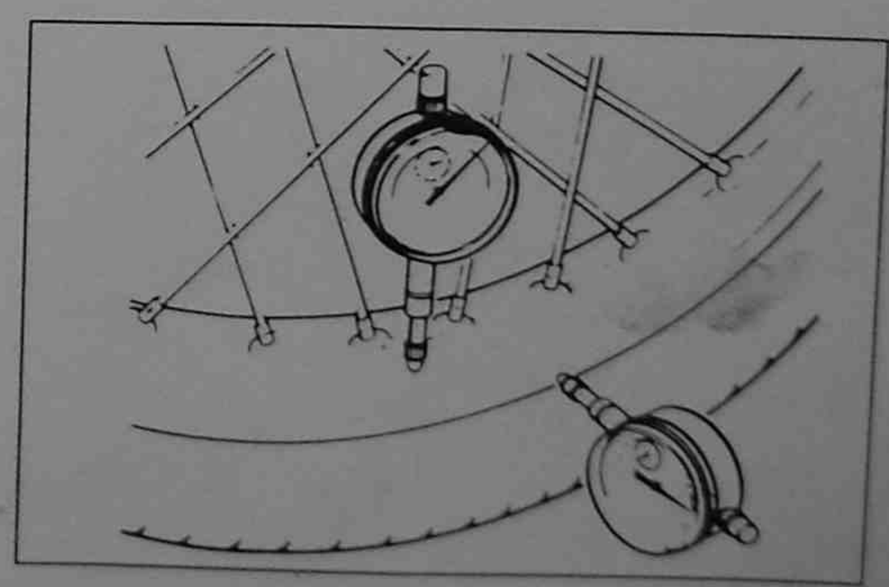

Axle Shaft Inspection

Support the axle shaft with V-blocks and measure the axle shaft runout.

Service limit: 0.25 mm (0.010 in)

Wheel Rim Inspection

Measure the wheel rim runout with a dial gauge.

Service limit: 2.0 mm (0.08 in) ... axial and radial

Wheel Bearing Inspection

- Turn the inner race by finger and inspect it for smooth movement.
- Inspect the clearance between the outer race and wheel hub.
- Inspect for bearing damage.

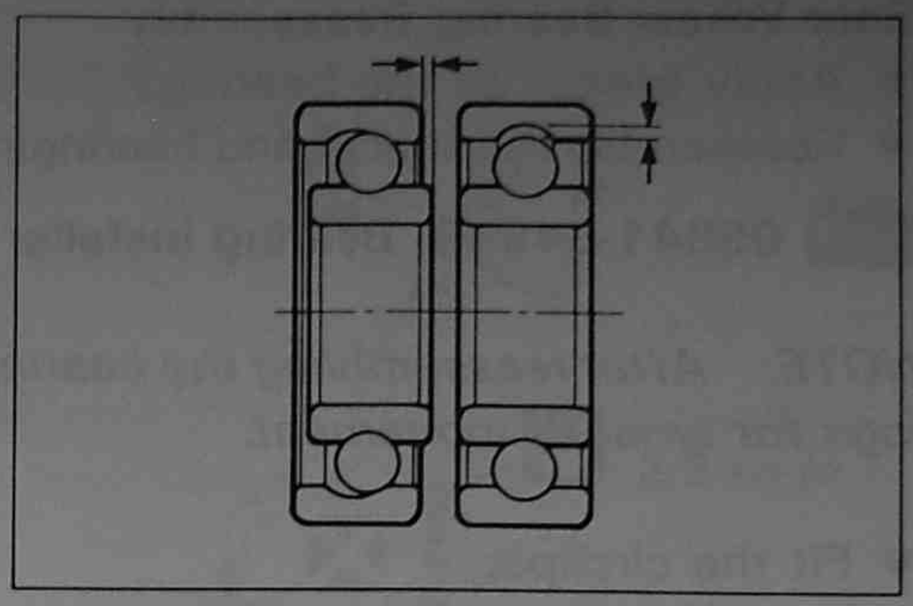

WHEEL BEARING REMOVAL AND REASSEMBLY

Front Wheel Bearing Removal

- Fit the bearing remover into the wheel bearing.

TOOL 09941-50111: Bearing remover

- Insert the wedge bar into the slit of the bearing remover from the opposite side.
- Hit the wedge bar with a hammer and remove the bearing and spacer.

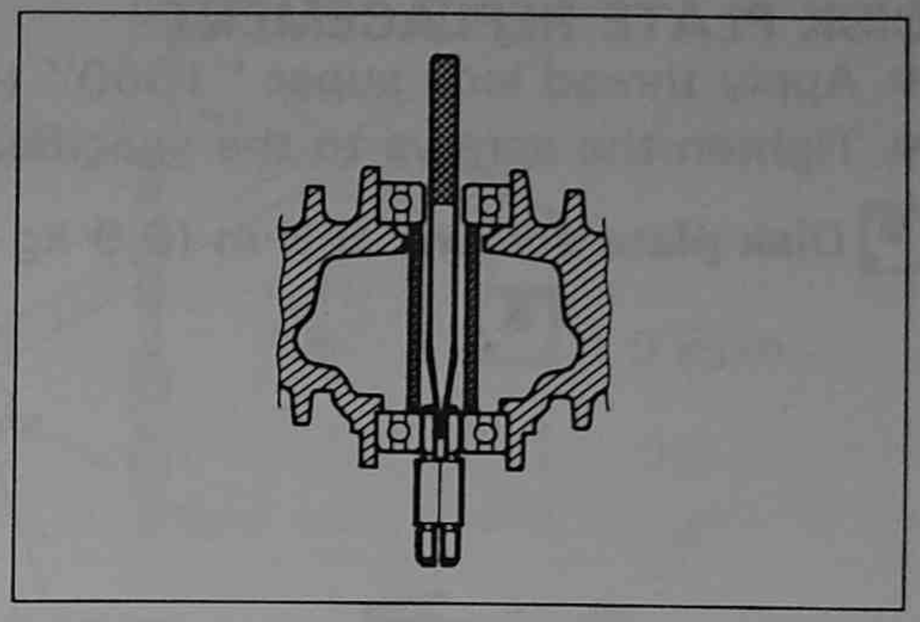

Rear Wheel Bearing Removal

- Remove the dust seal.
- Remove the circlip with snap ring pliers.
- Fit the bearing remover into the wheel bearing.

TOOL 09941-50111: Bearing remover

- Insert the wedge bar into the slit of the bearing remover from the opposite side.
- Hit the wedge bar with a hammer and remove the bearing.

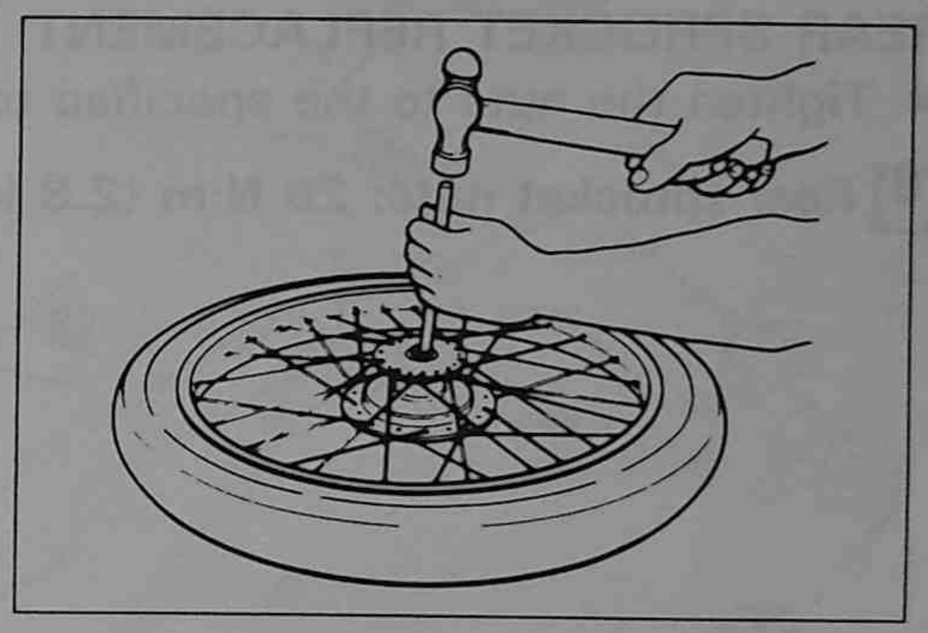

Front Wheel Bearing Reassembly

- Apply grease to the bearings.
- Reassemble the spacer and bearings with the special tool.

TOOL 09941-34513: Bearing installer set

NOTE:

- *Reassemble the left side (disk side) bearing first and then reassemble the right side bearing.*
- *Position the bearing so sealed side faces out.*
- *After reassembling the bearings, inspect the bearings for smooth movement.*

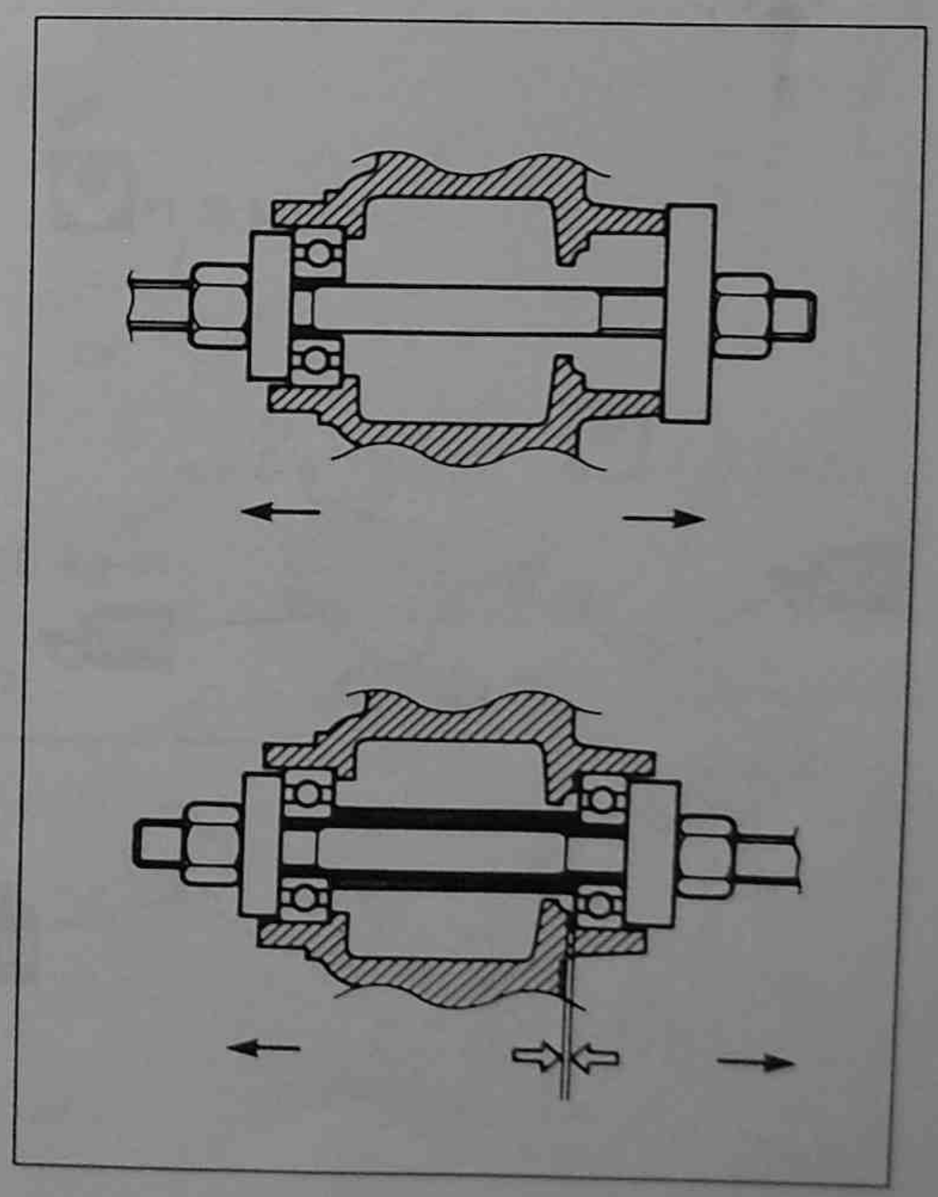

Rear Wheel Bearing Reassembly

- Apply grease to the bearings.
- Reassemble the spacer and bearings with the special tool.

TOOL 09941-34513: Bearing installer set

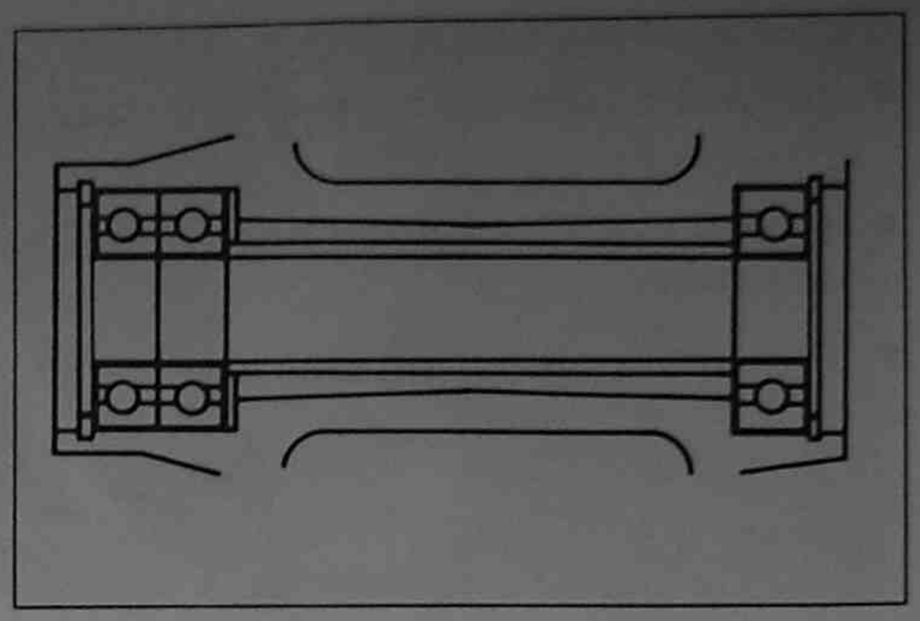

NOTE: After reassembling the bearings, inspect the bearings for smooth movement.

- Fit the circlips.

DISK PLATE REPLACEMENT

- Apply thread lock super "1360" to the screws.
- Tighten the screws to the specified torque.

Disk plate screws: 9 N·m (0.9 kg-m, 6.5 lb-ft)

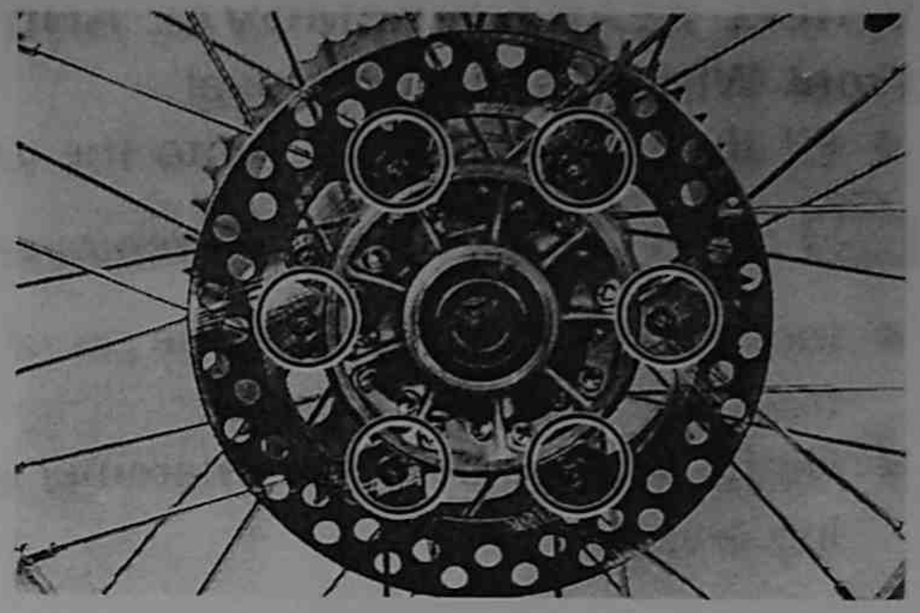

REAR SPROCKET REPLACEMENT

- Tighten the nuts to the specified torque.

Rear sprocket nuts: 28 N·m (2.8 kg-m, 20.0 lb-ft)

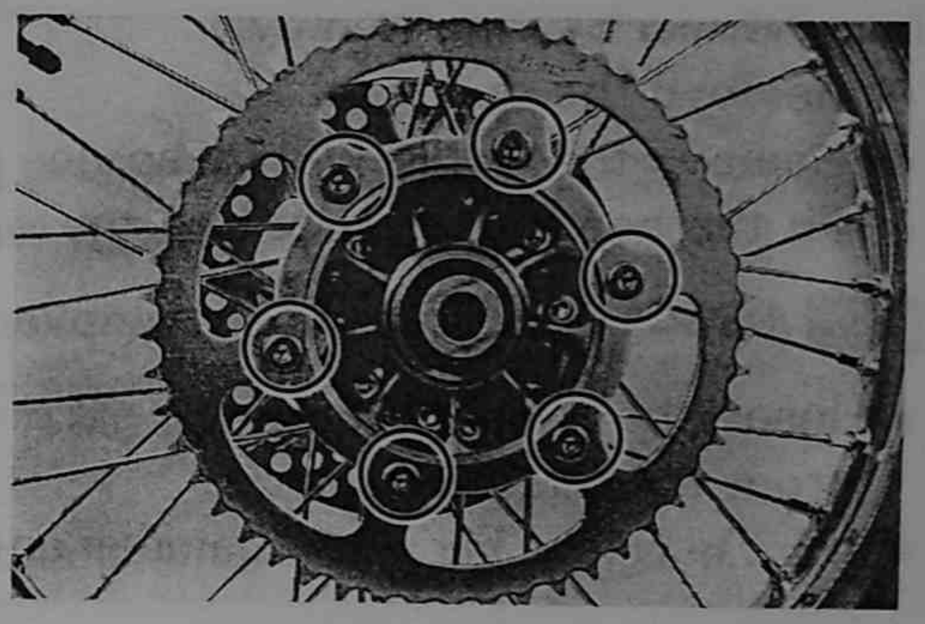

FRONT AND REAR BRAKES

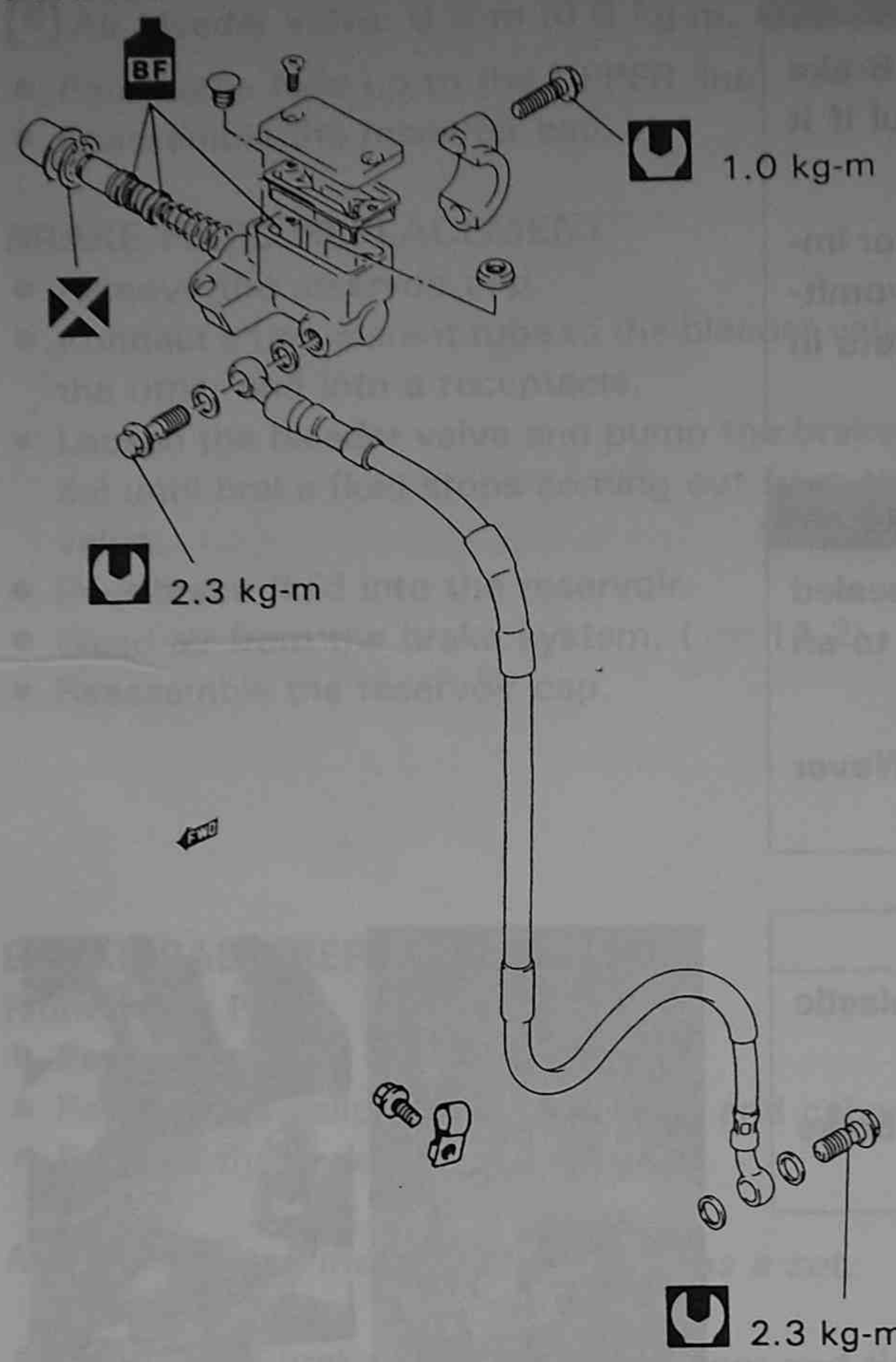

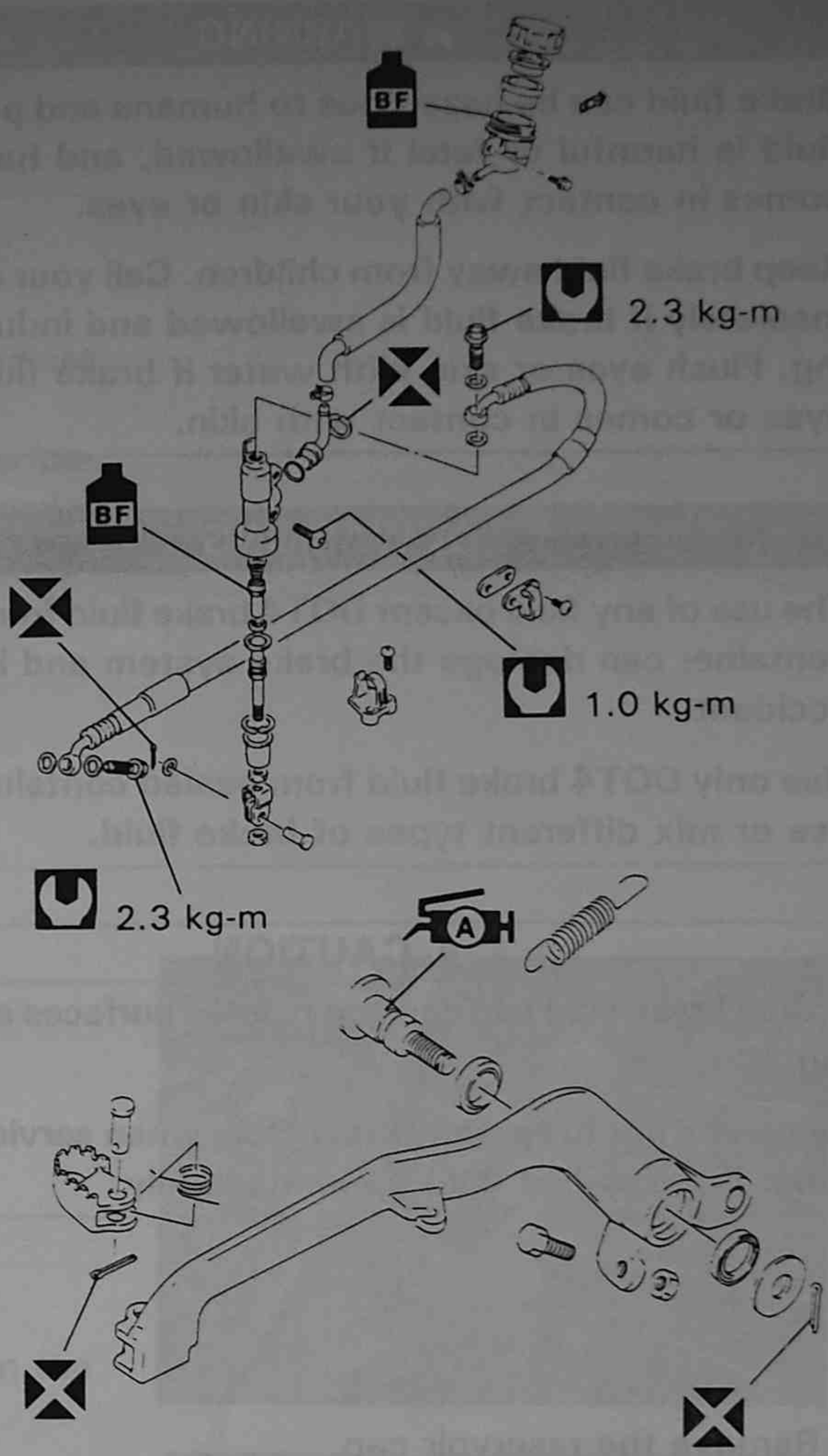

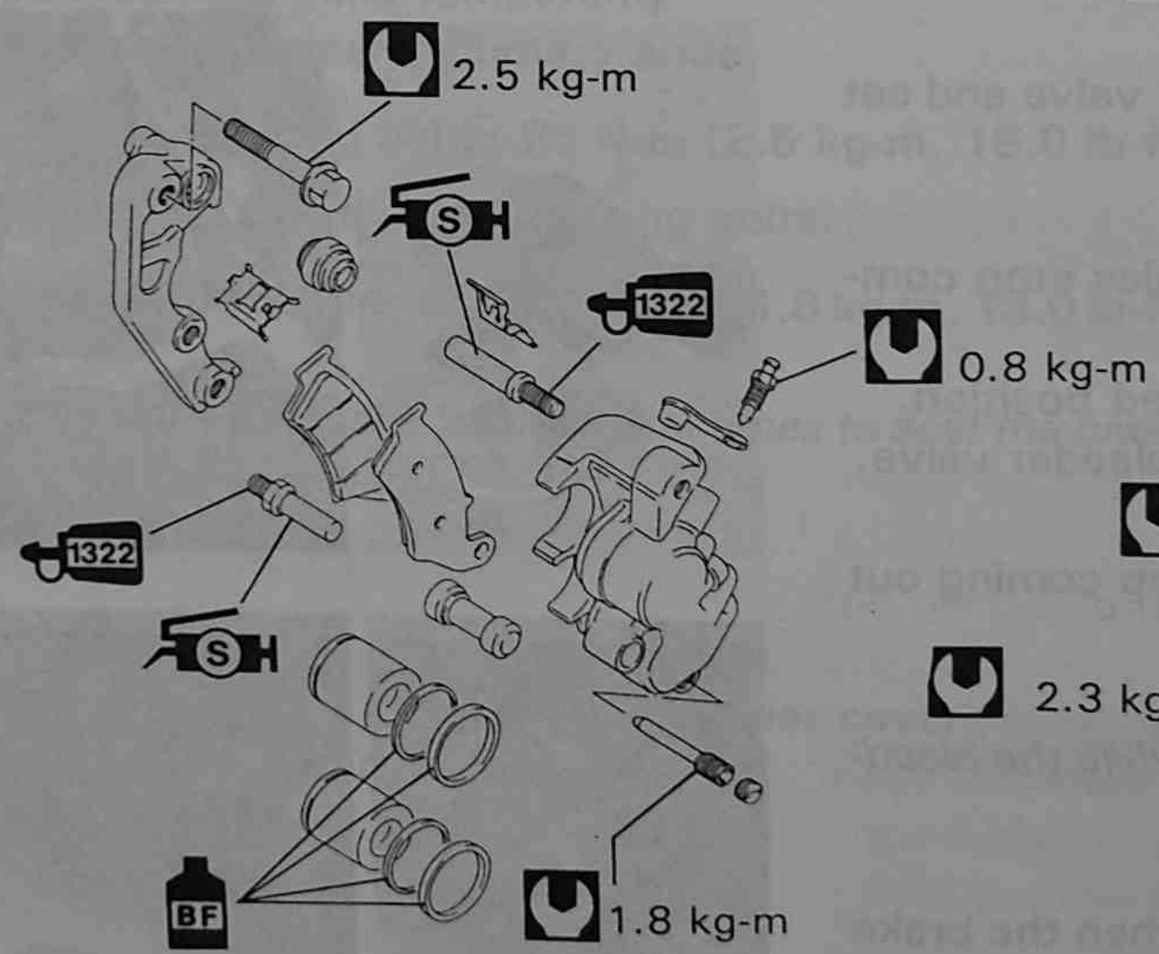

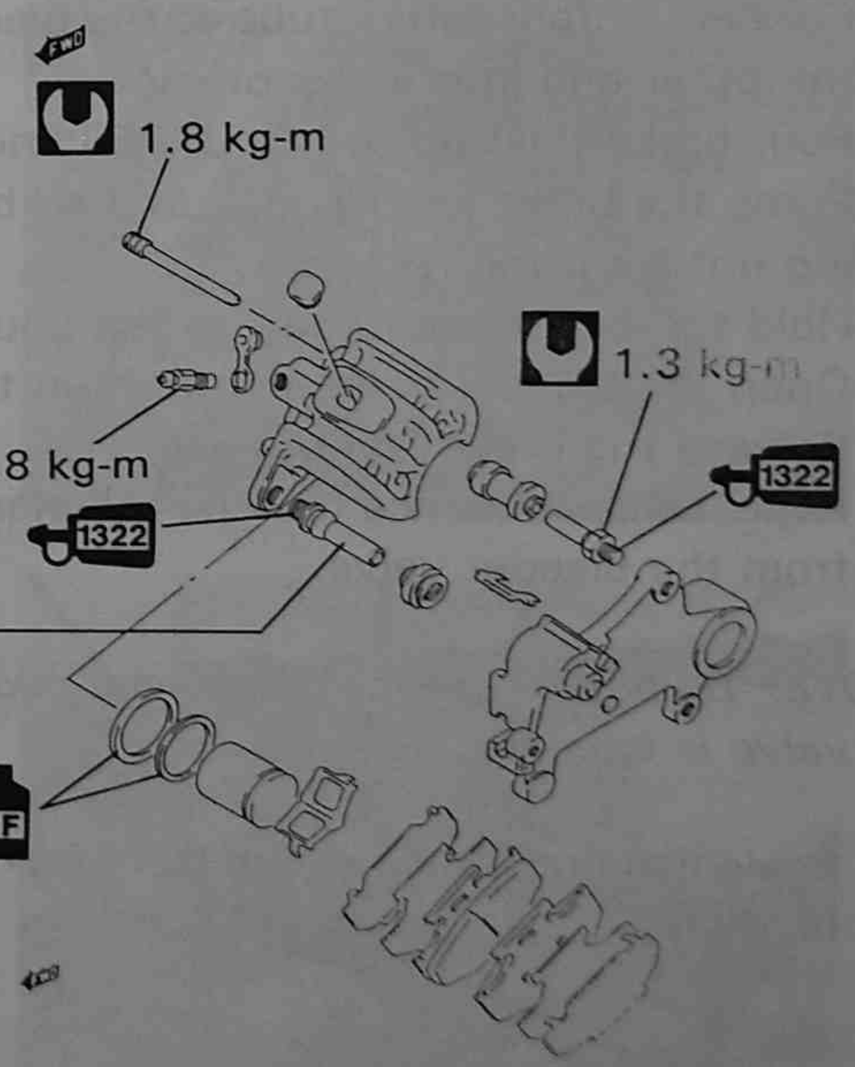

14

BRAKE FLUID AIR BLEEDING

⚠ WARNING

Brake fluid can be hazardous to humans and pets. Brake fluid is harmful or fatal if swallowed, and harmful if it comes in contact with your skin or eyes.

Keep brake fluid away from children. Call your doctor immediately if brake fluid is swallowed and induce vomiting. Flush eyes or skin with water if brake fluid gets in eyes or comes in contact with skin.

⚠ WARNING

The use of any fluid except DOT4 brake fluid from a sealed container can damage the brake system and lead to an accident.

Use only DOT4 brake fluid from sealed container. Never use or mix different types of brake fluid.

⚠ CAUTION

Spilled brake fluid can damage painted surfaces and plastic parts.

Be careful not to spill any brake fluid when servicing brake fluid. Wipe spilled fluid up immediately.

- Remove the reservoir cap.
- Connect a transparent tube to the bleeder valve and set the other end into a receptacle.
- Pour brake fluid up to the UPPER line.
- Pump the brake lever/pedal until air bubbles stop coming out from the reservoir.
- Hold the brake lever/pedal in the squeezed position.
- Open the bleeder valve and tighten the bleeder valve.
- Release the brake lever/pedal.
- Repeat this sequence until air bubbles stop coming out from the bleeder valve.

NOTE: Do not release the brake lever/pedal while the bleeder valve is opened.

- Replenish brake fluid to the UPPER line when the brake fluid level drops below LOWER line.

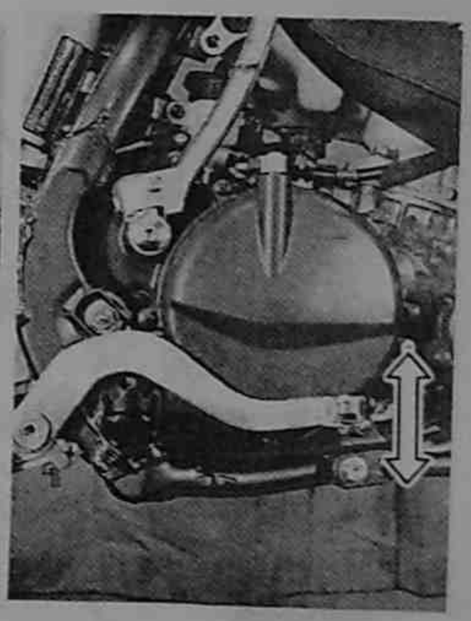

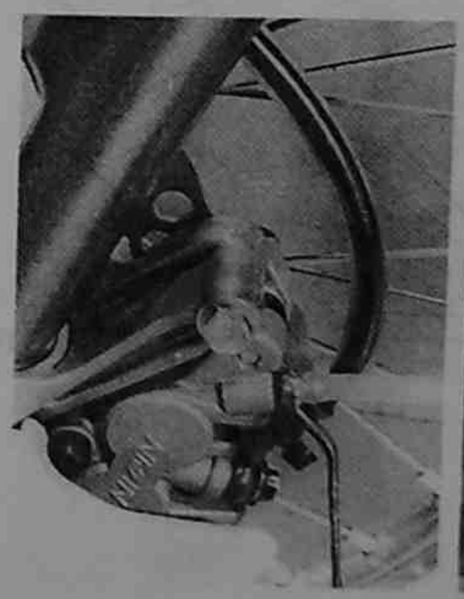

- Tighten the air bleeder valve.

Air bleeder valve: 8 N·m (0.8 kg-m, 6.0 lb-ft)

- Pour brake fluid up to the UPPER line.
- Reassemble the reservoir cap.

BRAKE FLUID REPLACEMENT

- Remove the reservoir cap.
- Connect a transparent tube to the bleeder valve and set the other end into a receptacle.
- Loosen the bleeder valve and pump the brake lever/pedal until brake fluid stops coming out from the bleeder valve.
- Pour brake fluid into the reservoir.
- Bleed air from the brake system. (☞ 14-2)
- Reassemble the reservoir cap.

BRAKE PADS REPLACEMENT

Front Brake Pads

- Remove the pad mounting bolts.
- Remove the caliper mounting bolts and caliper.
- Remove the brake pads.

NOTE: Replace the two brake pads as a set.

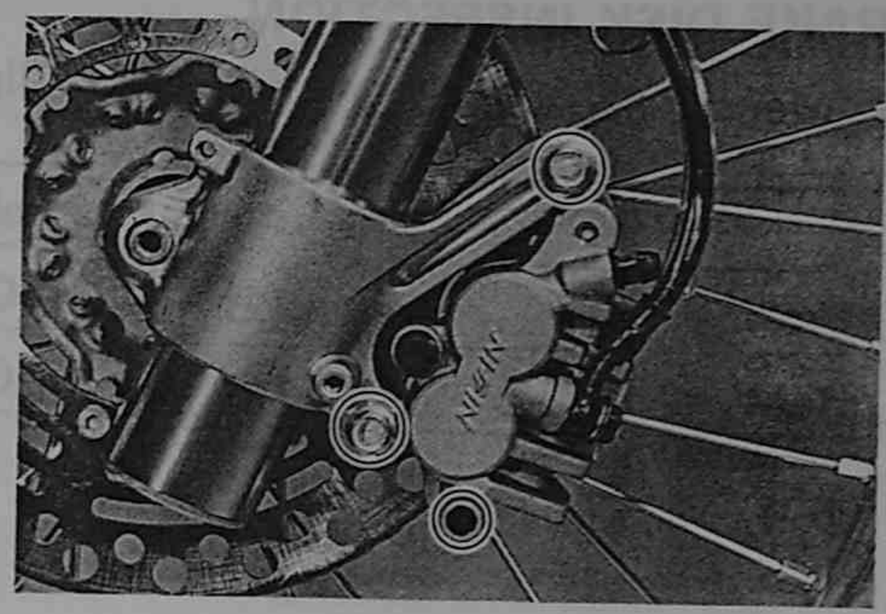

- Fit the new brake pads into the caliper and tighten the pad mounting bolts temporarily.
- Tighten the caliper mounting bolts.

Caliper mounting bolts: 25 N·m (2.5 kg-m, 18.0 lb-ft)

- Tighten the brake pad mounting bolts.

Brake pad mounting bolts: 18 N·m (1.8 kg-m, 13.0 lb-ft)

NOTE: Pump the brake lever several times to seat the brake pads after reassembling.

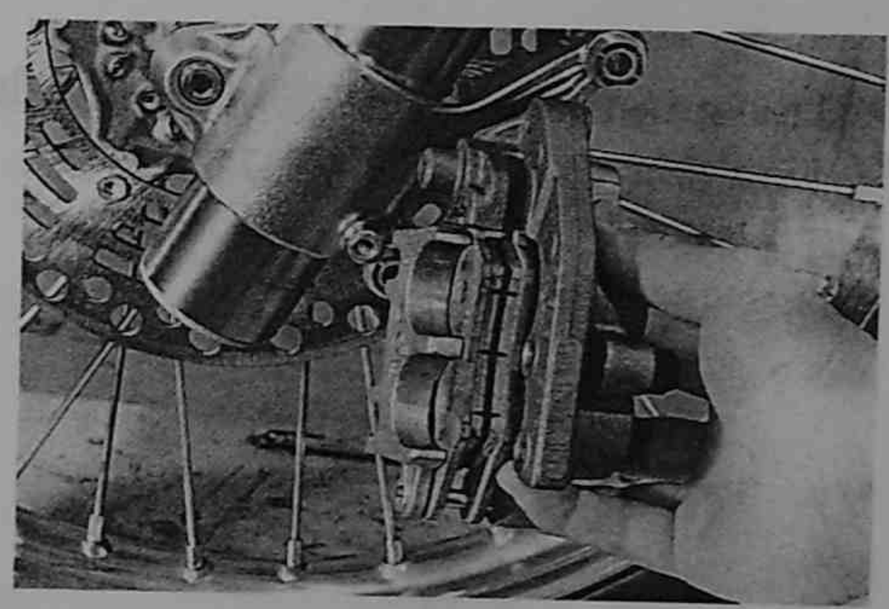

Rear Brake Pads

- Remove the two bolts and the caliper cover.
- Remove the pad mounting bolts.

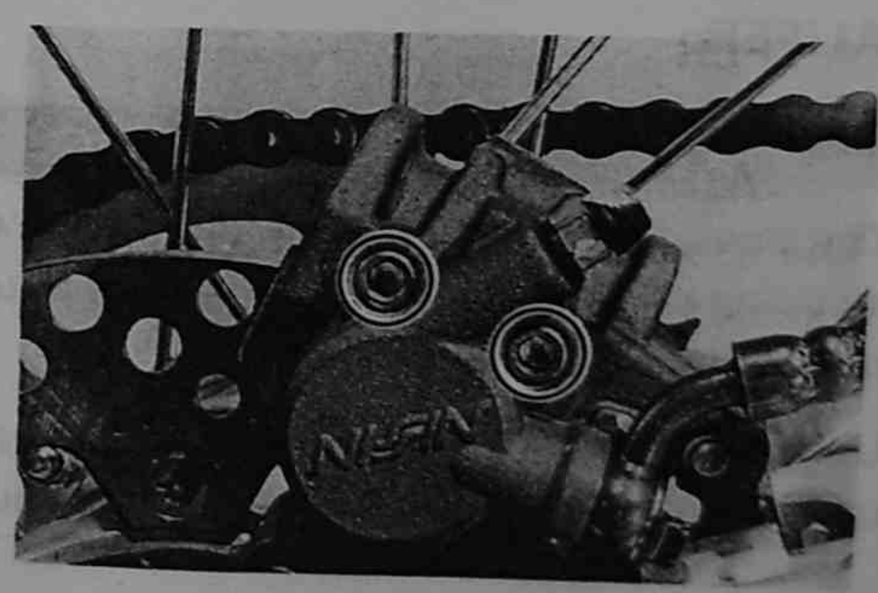

- Remove the brake pads.

NOTE: Replace the two pads as a set.

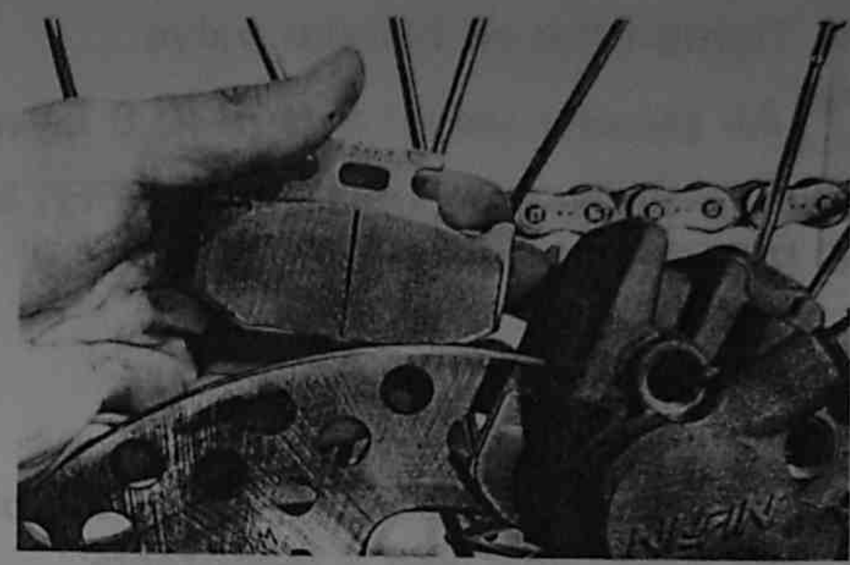

- Fit the brake pads into the caliper.
- Tighten the brake pad mounting bolts.

Brake pad mounting bolt: 18 N·m (1.8 kg-m, 13.0 lb-ft)

- Reassemble the caliper cover.

NOTE: Pump the brake pedal several times to seat the brake pads after reassembling.

BRAKE DISK INSPECTION

- Measure the front and rear brake disk thickness.

	Service limit
Front	2.5 mm (0.10 in)
Rear	4.0 mm (0.16 in)

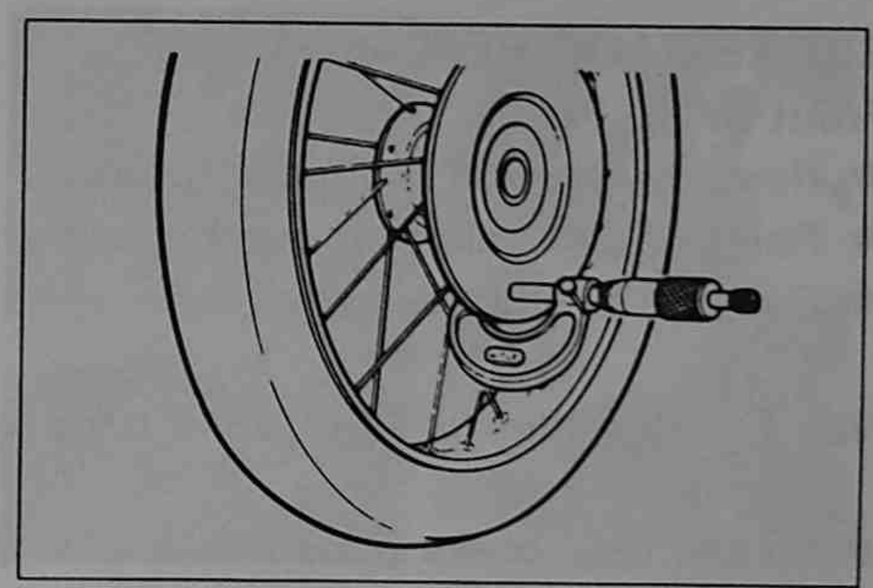

- Measure the front and rear brake disk runout.

Service limit: 0.3 mm (0.01 in)

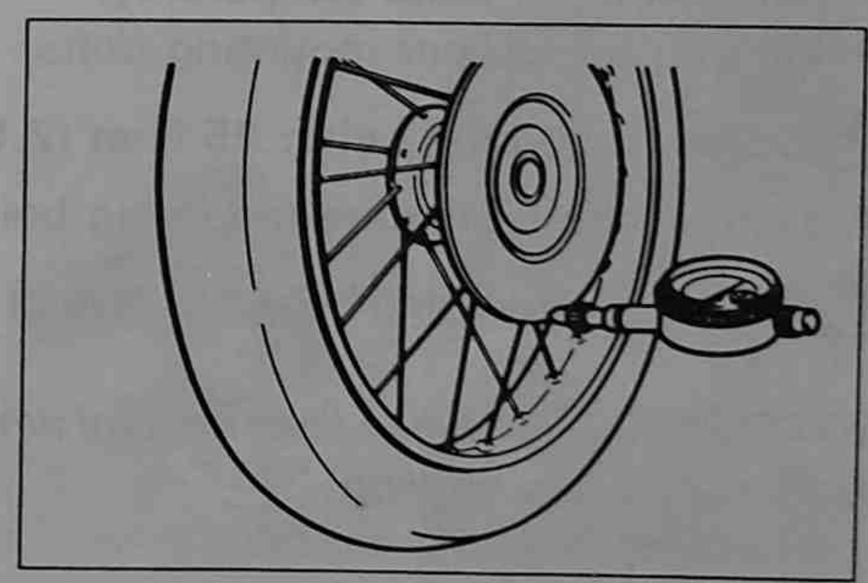

CALIPER

⚠ WARNING

The use of any brake fluid except DOT4 brake fluid from a sealed container can damage the brake system and lead to an accident.

Use only DOT4 brake fluid from a sealed container. Never use or mix different types of brake fluid.

⚠ WARNING

Brake fluid can be hazardous to humans and pets. Brake fluid is harmful or fatal if swallowed, and harmful if it comes in contact with your skin or eyes.

Keep brake fluid away from children. Call your doctor immediately if brake fluid is swallowed, and induce vomiting. Flush eyes or skin with water if brake fluid gets in eyes or comes in contact with skin.

⚠ CAUTION

Spilled brake fluid can damage painted surfaces and plastic parts.

Be careful not to spill any fluid when servicing the caliper. Wipe spilled fluid up immediately.

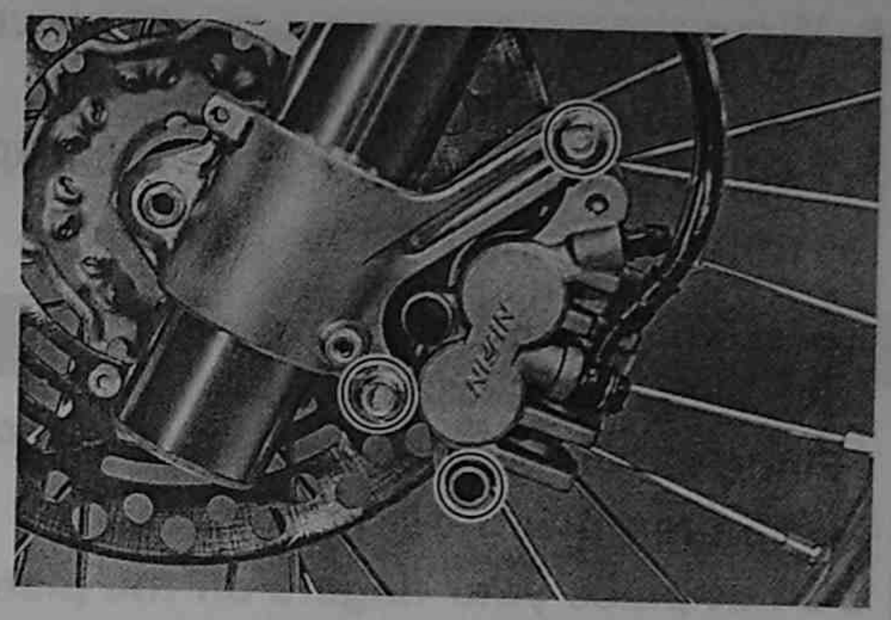

Front Caliper Removal and Disassembly

- Place a drain pan under the caliper and remove the union bolt.
- Remove the pad mounting bolts.
- Remove the caliper mounting bolts.
- Remove the brake pads and spring from the caliper.
- Remove the caliper bracket from the caliper.
- Remove the boots from the caliper bracket.
- Wrap the caliper with a rag to prevent brake fluid scatter and piston pop-out.
- Apply low-pressure air into the caliper through the hole to remove the pistons.

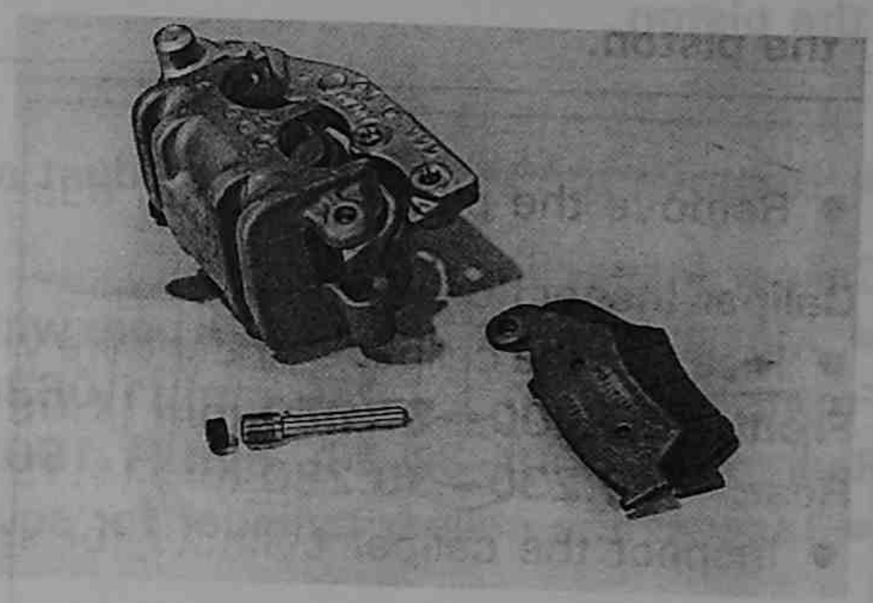

⚠ WARNING

Fingers can get caught between piston and caliper body when removing the piston.

Do not place your fingers on the piston when removing the piston.

- Remove the piston seals ① and dust seals ②.

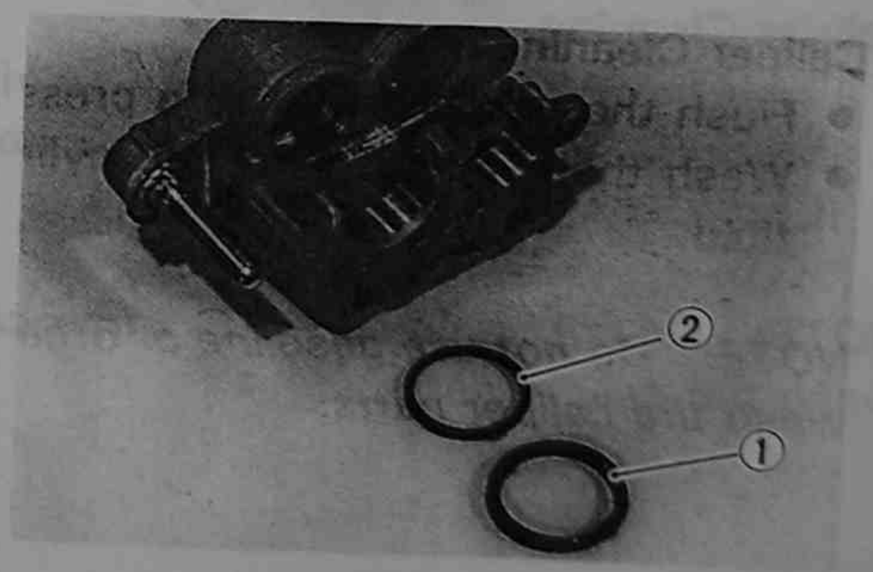

Rear Caliper Removal and Disassembly

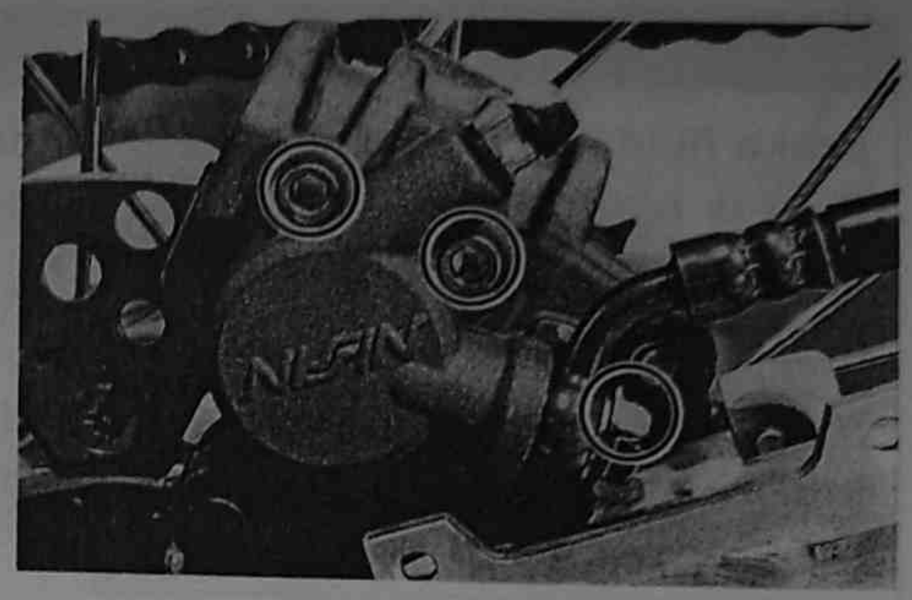

- Place a block under the chassis tubes.
- Place a rag under the brake hose union bolt to catch spilled brake fluid.
- Disconnect the brake hose.
- Remove the brake pad mounting bolts.
- Remove the cotter pin and axle nut.
- Draw out the axle shaft.
- Slide off the caliper bracket with the caliper.
- Remove the brake pads and spring from the caliper.
- Wrap the caliper with a rag to prevent brake fluid scatter and piston pop-out.
- Apply low-pressure air into the caliper through the hole to remove the piston.

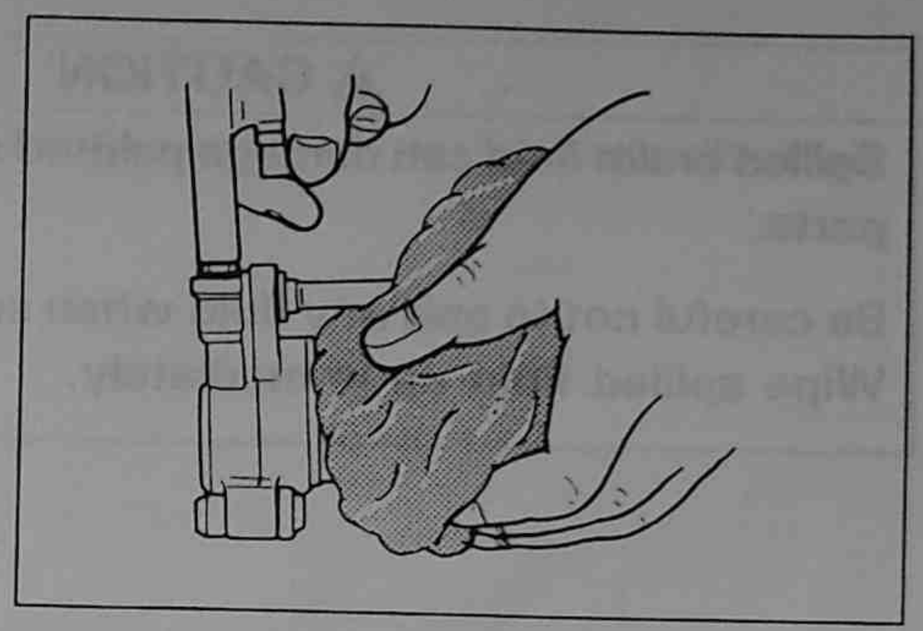

⚠ WARNING

Fingers can get caught between piston and caliper body when removing the piston.

Do not place your fingers on the piston when removing the piston.

- Remove the piston seal and dust seal.

Caliper Inspection

- Measure the caliper cylinder bore with a small bore gauge.

Front: 27.000–27.050 mm (1.0630–1.0650 in)
Rear: 30.230–30.280 mm (1.1902–1.1921 in)

- Inspect the caliper cylinder for scuffing.

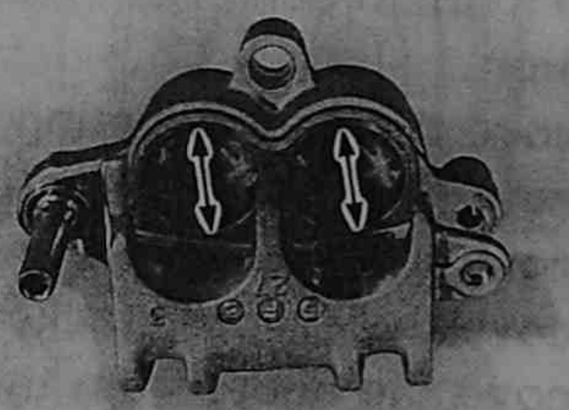

- Measure the caliper piston diameter with a micrometer.

Front: 26.900–26.950 mm (1.0591–1.0610 in)
Rear: 30.160–30.180 mm (1.1874–1.1882 in)

- Inspect the caliper piston for scuffing.

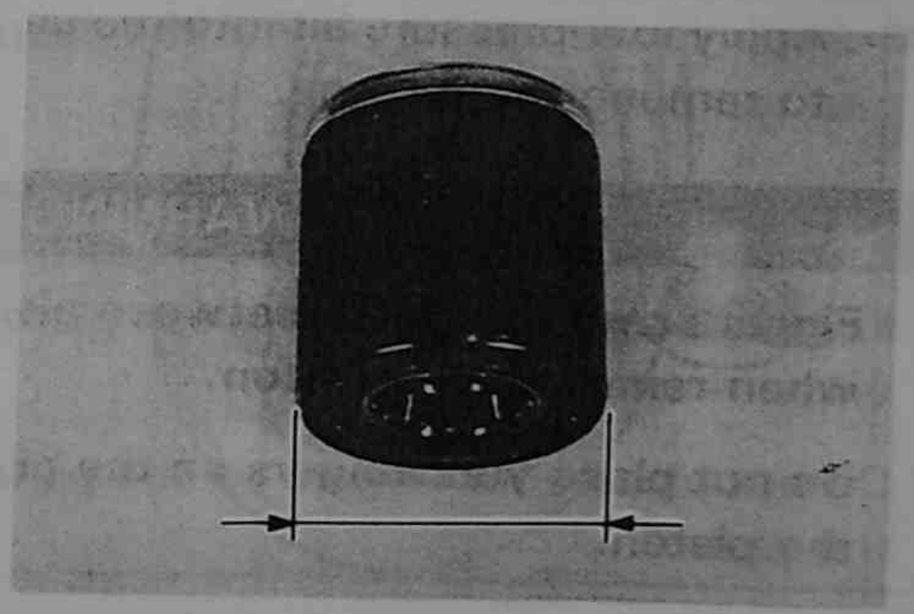

Caliper Cleaning

- Flush the caliper ports with pressurized air.
- Wash the caliper piston and cylinder with fresh brake fluid.

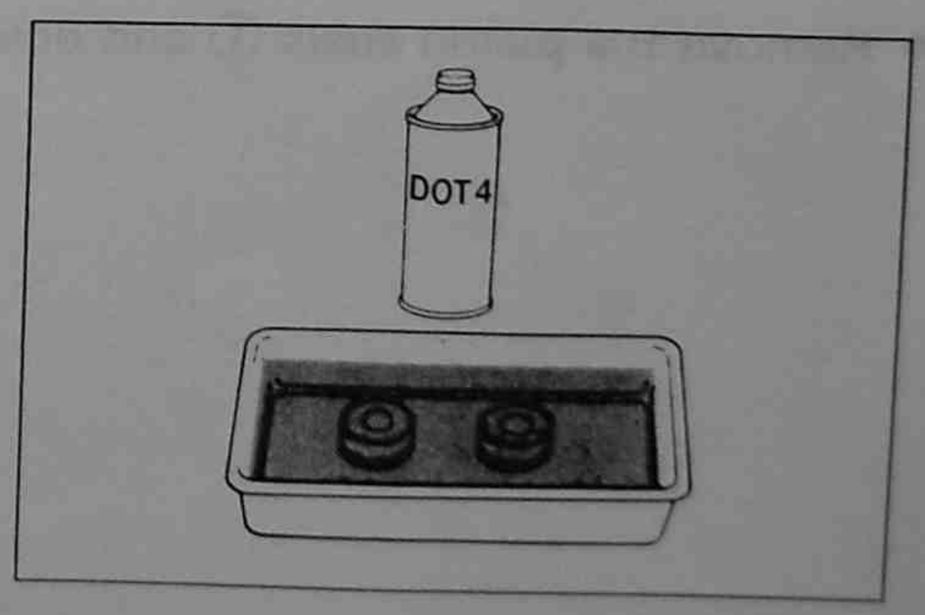

NOTE: Do not use gasoline or other cleaning solvents to wash the caliper parts.

Front Caliper Reassembly

- Apply brake fluid to the piston seals and fit the piston seals ① and dust seals ②.
- Fit the pistons into the caliper.
- Apply silicone grease to the caliper axles.

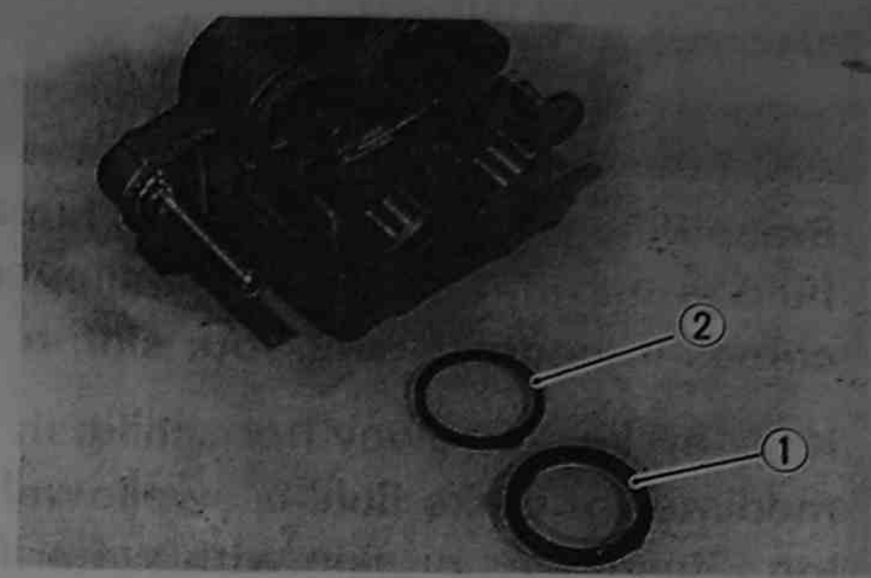

99000-25100: Suzuki silicone grease

- Fit the boots and caliper brackets.
- Fit the spring and brake pads. Tighten the brake pad mounting bolts temporarily.
- Tighten the caliper mounting bolts to the specified torque.

Caliper mounting bolts: 25 N·m (2.5 kg-m, 18.0 lb-ft)

- Tighten the brake pad mounting bolts to the specified torque.

Brake pad mounting bolts: 18 N·m (1.8 kg-m, 13.0 lb-ft)

- Tighten the brake hose union bolt to the specified torque.

Brake hose union bolt: 23 N·m (2.3 kg-m, 16.5 lb-ft)

- Refill brake fluid and bleed air from the brake system. (☞ 14-2)

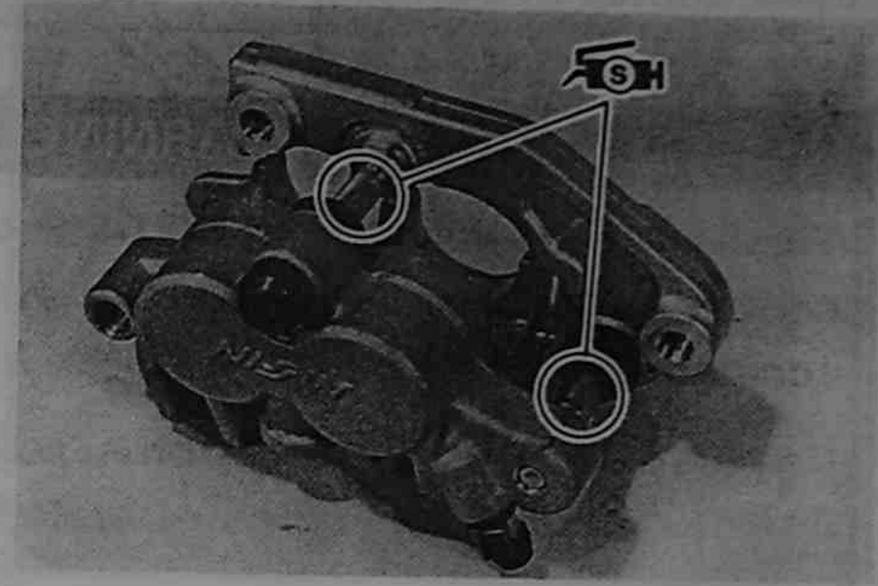

Rear Caliper Reassembly

- Apply brake fluid to the piston seal and fit the piston seal ① and dust seal ②.
- Fit the piston into the caliper.
- Fit the spring and pads. Tighten the brake pad mounting bolts temporarily.
- Apply silicone grease to the caliper axles.

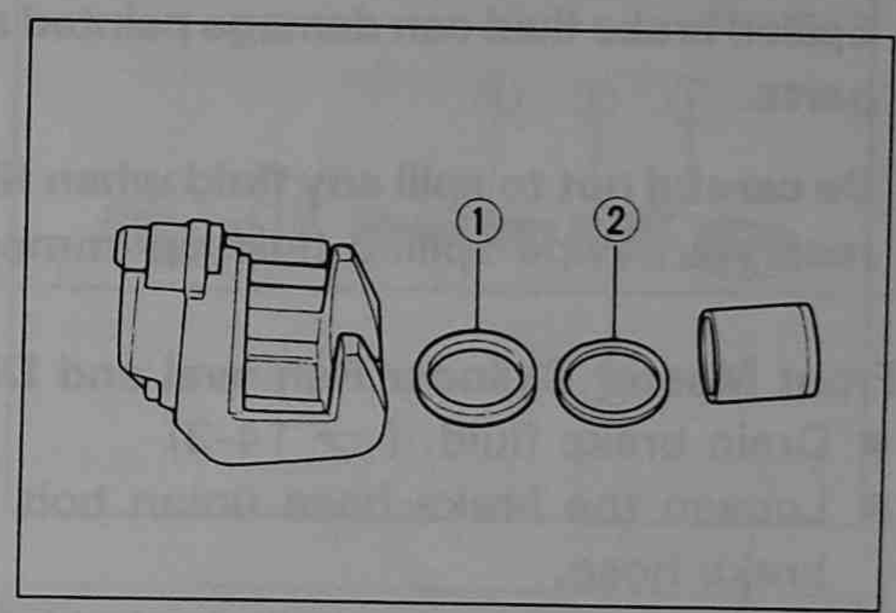

99000-25100: Suzuki silicone grease

- Fit the caliper to the bracket.
- Slide the bracket into the swingarm.
- Reassemble the axle shaft. (☞ 13-2)
- Tighten the brake hose union bolt.

Brake hose union bolt: 23 N·m (2.3 kg-m, 16.5 lb-ft)

- Refill brake fluid and bleed air from the brake system. (☞ 14-2)

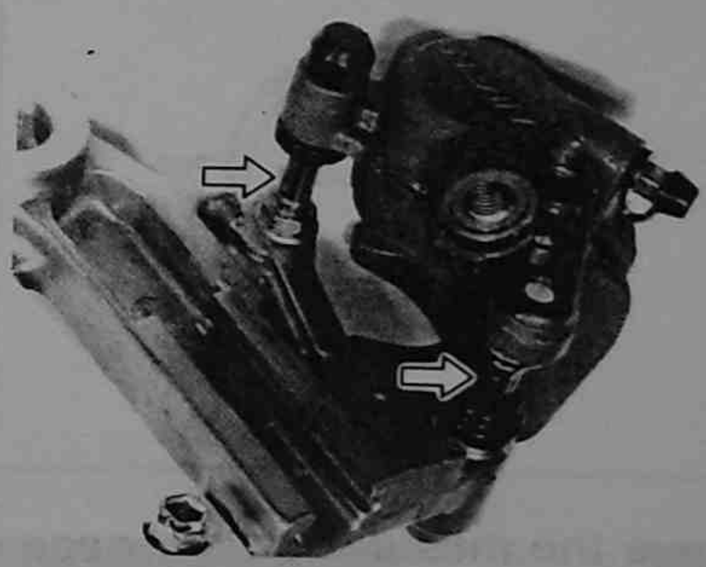

MASTER CYLINDER

⚠ WARNING

Brake fluid can be hazardous to humans and pets. Brake fluid is harmful or fatal if swallowed, and harmful if it comes in contact with your skin or eyes.

Keep brake fluid away from children. Call your doctor immediately if brake fluid is swallowed, and induce vomiting. Flush eyes or skin with water if brake fluid gets in eyes comes in contact with skin.

⚠ WARNING

The use of any fluid except DOT4 brake fluid from a sealed container can damage the brake system and lead to an accident.

Use only DOT4 brake fluid from a sealed container. Never use or mix different types of brake fluid.

⚠ CAUTION

Spilled brake fluid can damage painted surfaces and plastic parts.

Be careful not to spill any fluid when filling the brake fluid reservoir. Wipe spilled fluid up immediately.

Front Master Cylinder Removal and Disassembly

- Drain brake fluid. (☞ 14-3)
- Loosen the brake hose union bolt and disconnect the brake hose.
- Remove the master cylinder holder bolts.

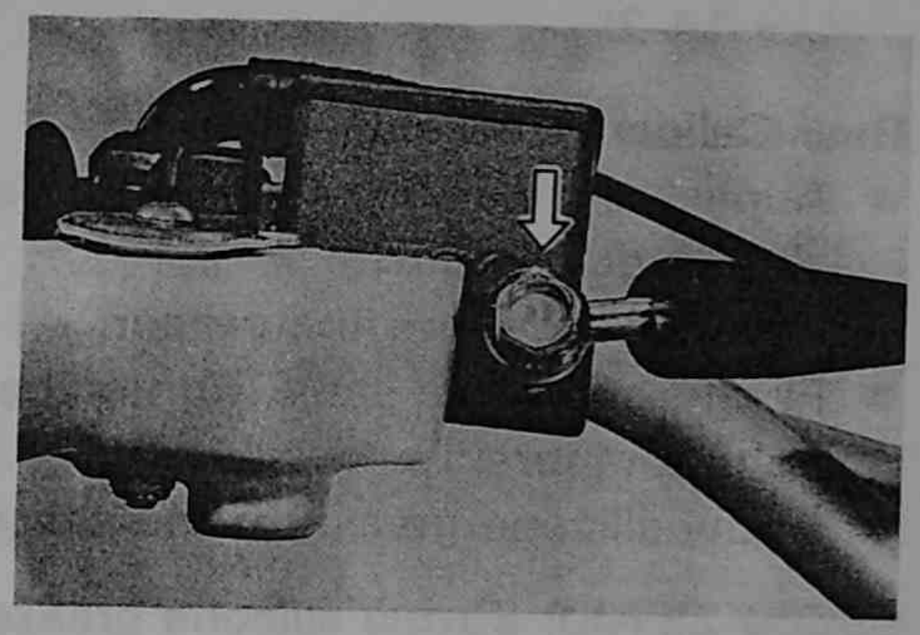

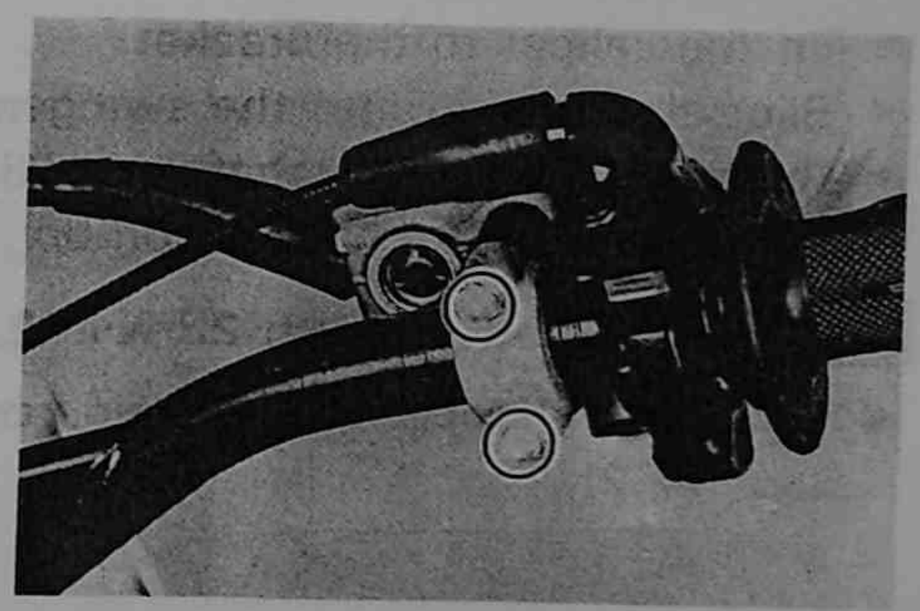

- Remove the master cylinder cap.
- Remove the bolt and brake lever.
- Remove the brake lever return spring.

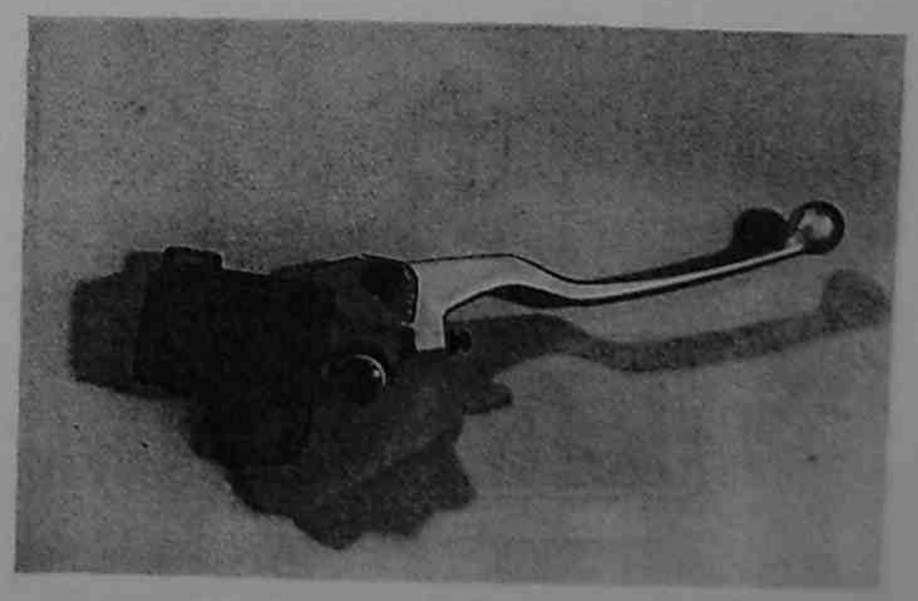

- Remove the dust seal boot ①.
- Remove the circlip ② with snap ring pliers.
- Remove the washer ③, piston ④ and spring ⑤.

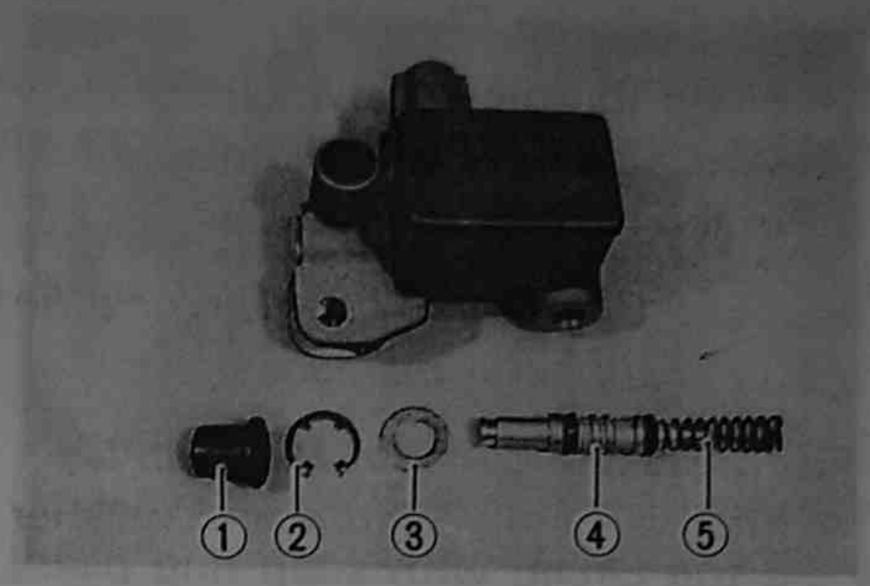

Rear Master Cylinder Removal and Disassembly

- Drain brake fluid.(☞ 14-3)
- Remove the rear brake pedal. (☞ 14-11)
- Place a rag under the hose to catch spilled brake fluid.
- Remove the clamp and disconnect the hose (reservoir).
- Remove the union bolt.
- Remove the master cylinder clamp bolts.
- Remove the dust seal boot ①.
- Remove the circlip ② with snap ring pliers.
- Remove the push rod ③.
- Remove the piston/cup set ④.

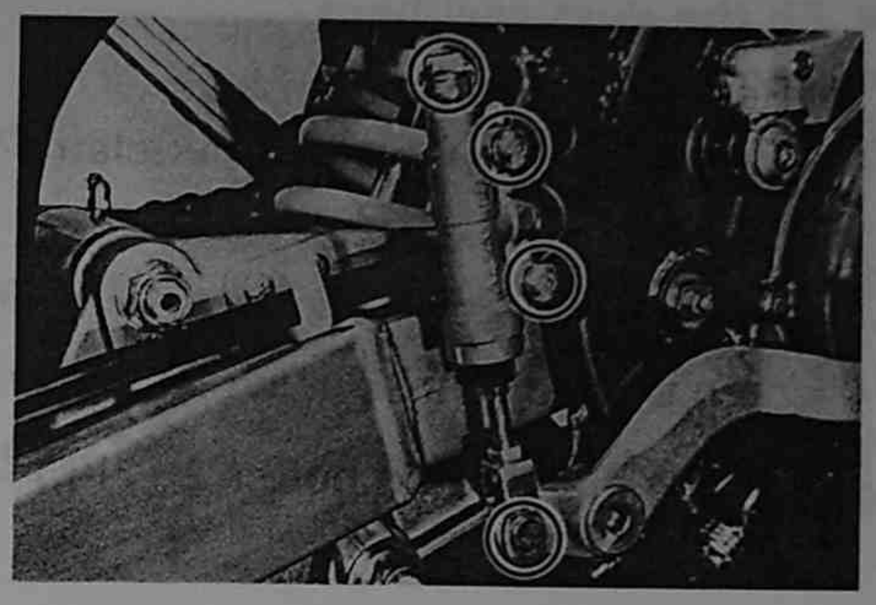

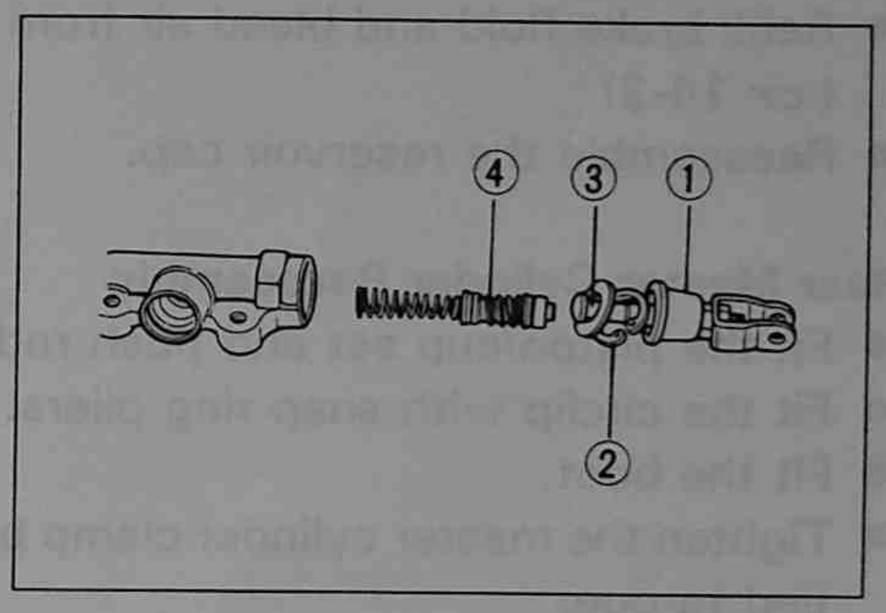

Master Cylinder Inspection

- Measure the cylinder bore with a small bore gauge.

Front: 11.000–11.043 mm (0.4331–0.4348 in)
Rear: 14.000–14.043 mm (0.5512–0.5529 in)

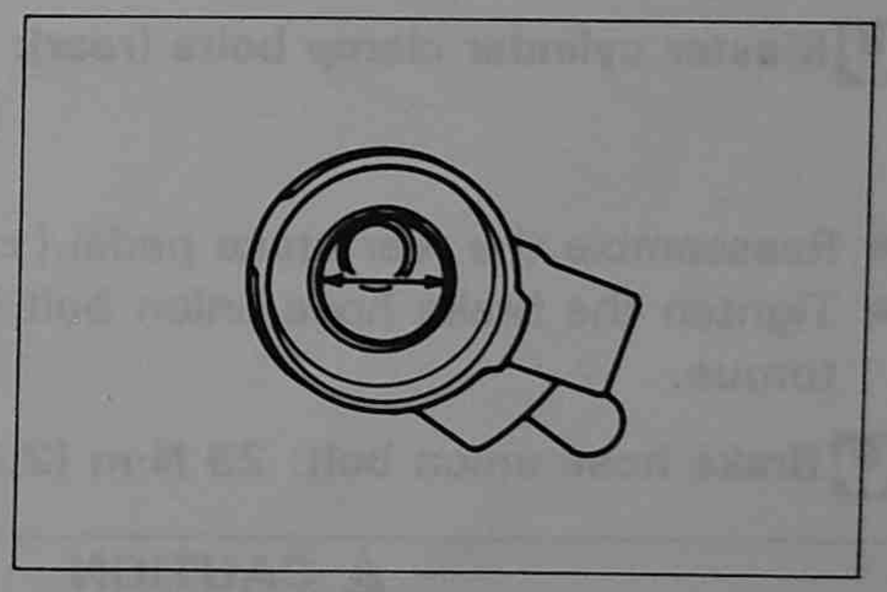

- Measure the cylinder piston diameter with a micrometer.

Front: 10.957–10.984 mm (0.4314–0.4324 in)
Rear: 13.957–13.984 mm (0.5495–0.5506 in)

- Inspect the cylinder bore and piston for scuffing.
- Inspect the piston rod and spring for damage.

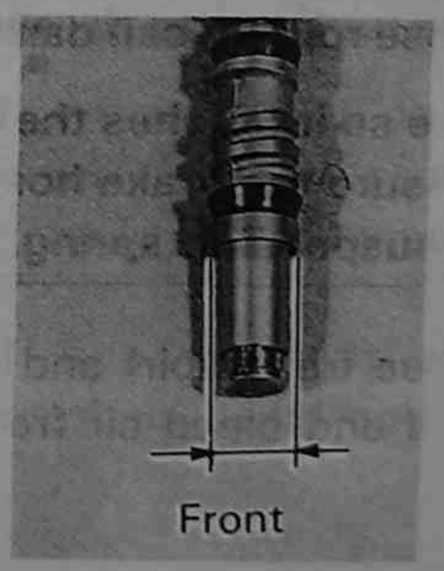
Front

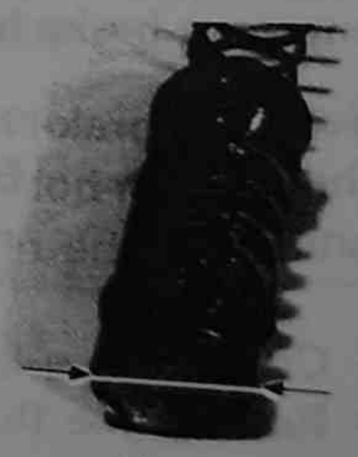
Rear

Master Cylinder Cleaning

- Flush the master cylinder ports with pressurized air.
- Wash the master cylinder bore and piston with fresh brake fluid.

NOTE: Do not use gasoline or other cleaning solvents to wash the master cylinder parts.

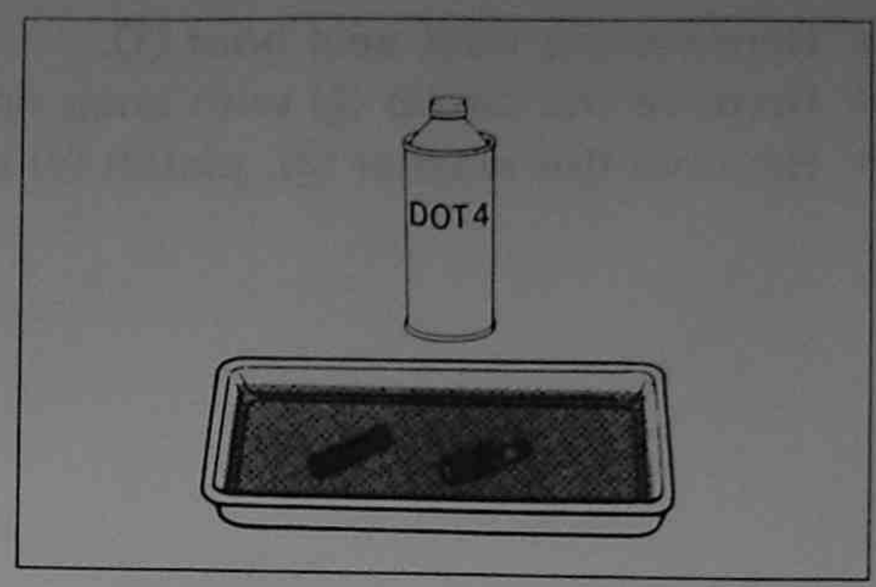

Front Master Cylinder Reassembly

- Fit the spring, piston and washer.
- Fit the circlip with snap ring pliers.
- Fit the dust seal boot.
- Reassemble the brake lever.
- Tighten the master cylinder clamp bolts to the specified torque.

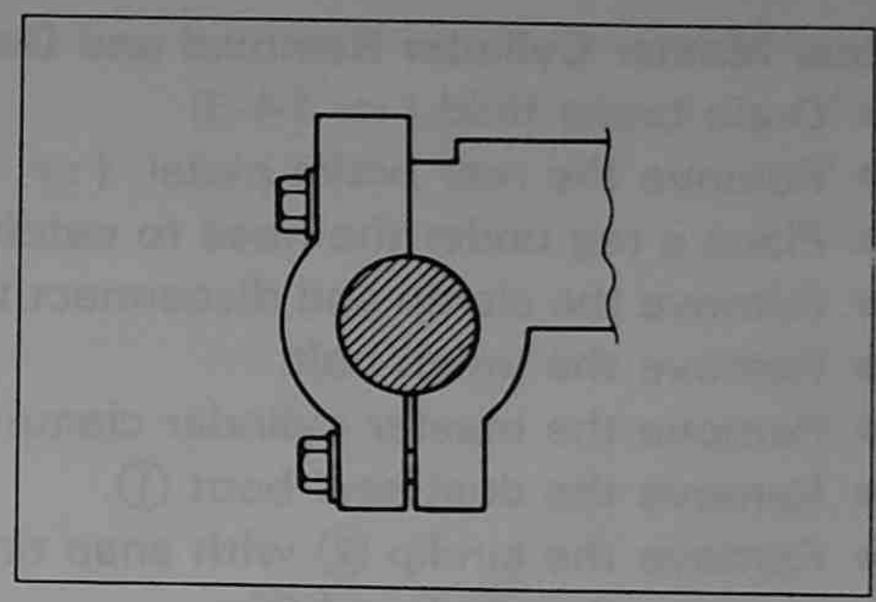

Master cylinder clamp bolts: 10 N·m (1.0 kg-m, 7.0 lb-ft)

Tighten the brake hose union bolts ① to the specified torque.

Brake hose union bolts: 23 N·m (2.3 kg-m, 16.5 lb-ft)

- Refill brake fluid and bleed air from the brake system. (☞ 14-2)
- Reassemble the reservoir cap.

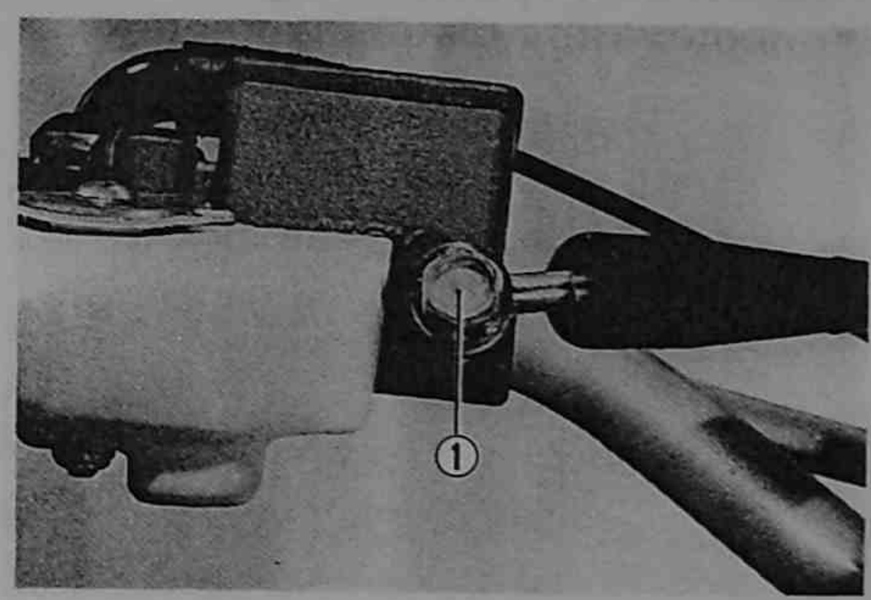

Rear Master Cylinder Reassembly

- Fit the piston/cup set and push rod.
- Fit the circlip with snap ring pliers.
- Fit the boot.
- Tighten the master cylinder clamp bolts ③ to the specified torque.

Master cylinder clamp bolts (rear): 10 N·m (1.0 kg-m, 7.0 lb-ft)

- Reassemble the rear brake pedal.(☞ 14-11)
- Tighten the brake hose union bolt ② to the specified torque.

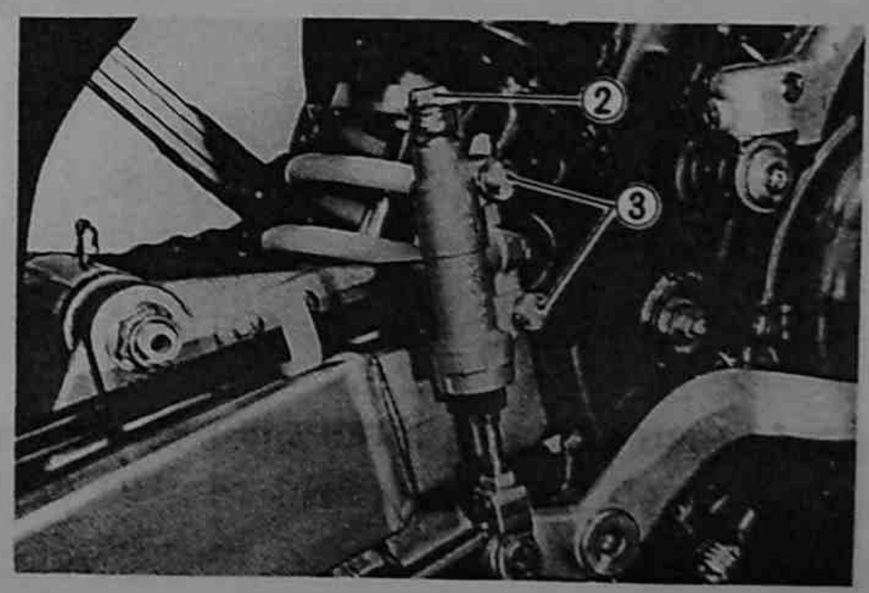

Brake hose union bolt: 23 N·m (2.3 kg-m, 16.5 lb-ft)

⚠ CAUTION

Improper brake hose routing can damage the brake hose.

Set the brake hose so it touches the stopper and tighten the union bolt. Ensure the brake hose has enough clearance to the rear suspension spring.

- Connect the hose (reservoir) and clamp it.
- Refill brake fluid and bleed air from the brake system. (☞ 14-2)

BRAKE PEDAL REMOVAL AND REASSEMBLY

Removal

- Remove the cotter pins behind the frame.
- Loosen and remove the brake pedal pivot bolt.
- Remove the return spring.
- Remove the cotter pins and pin.

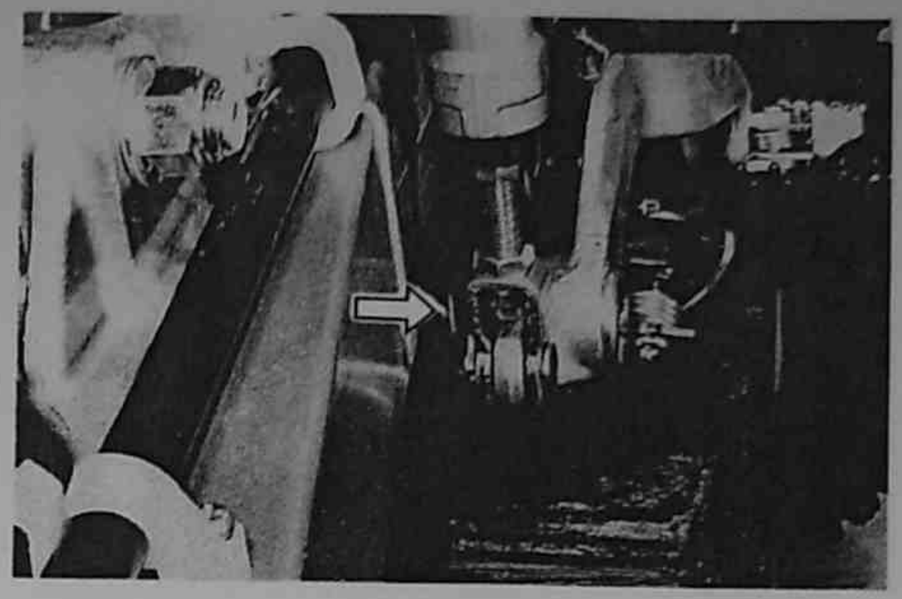

Reassembly

- Reassemble the pin, washer and cotter pins.
- Fit the return spring.
- Apply grease to the brake pedal pivot bolt. Tighten the bolt.
- Fit the washer and cotter pins.
- Adjust the brake pedal height. (☞ 2-12)

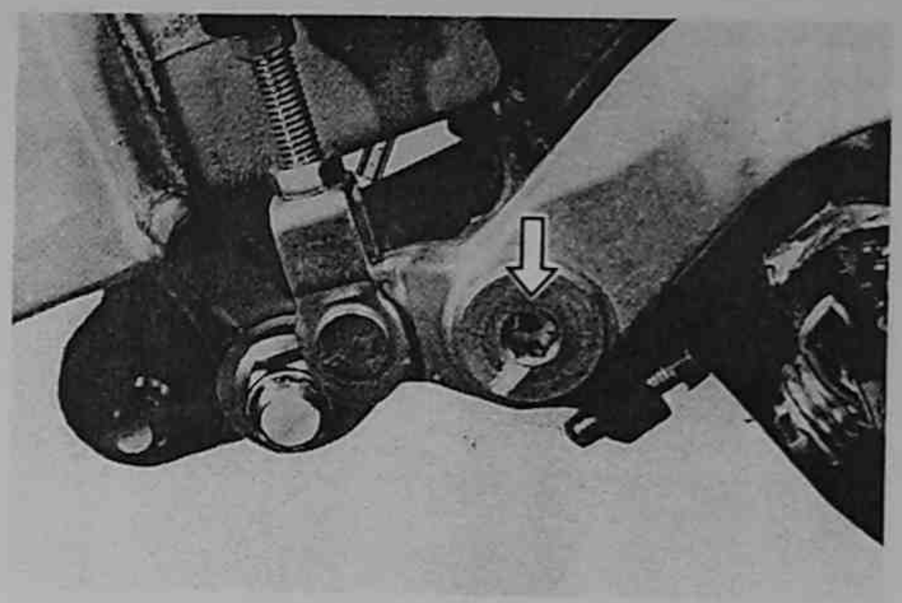

FRONT FORK AND STEERING

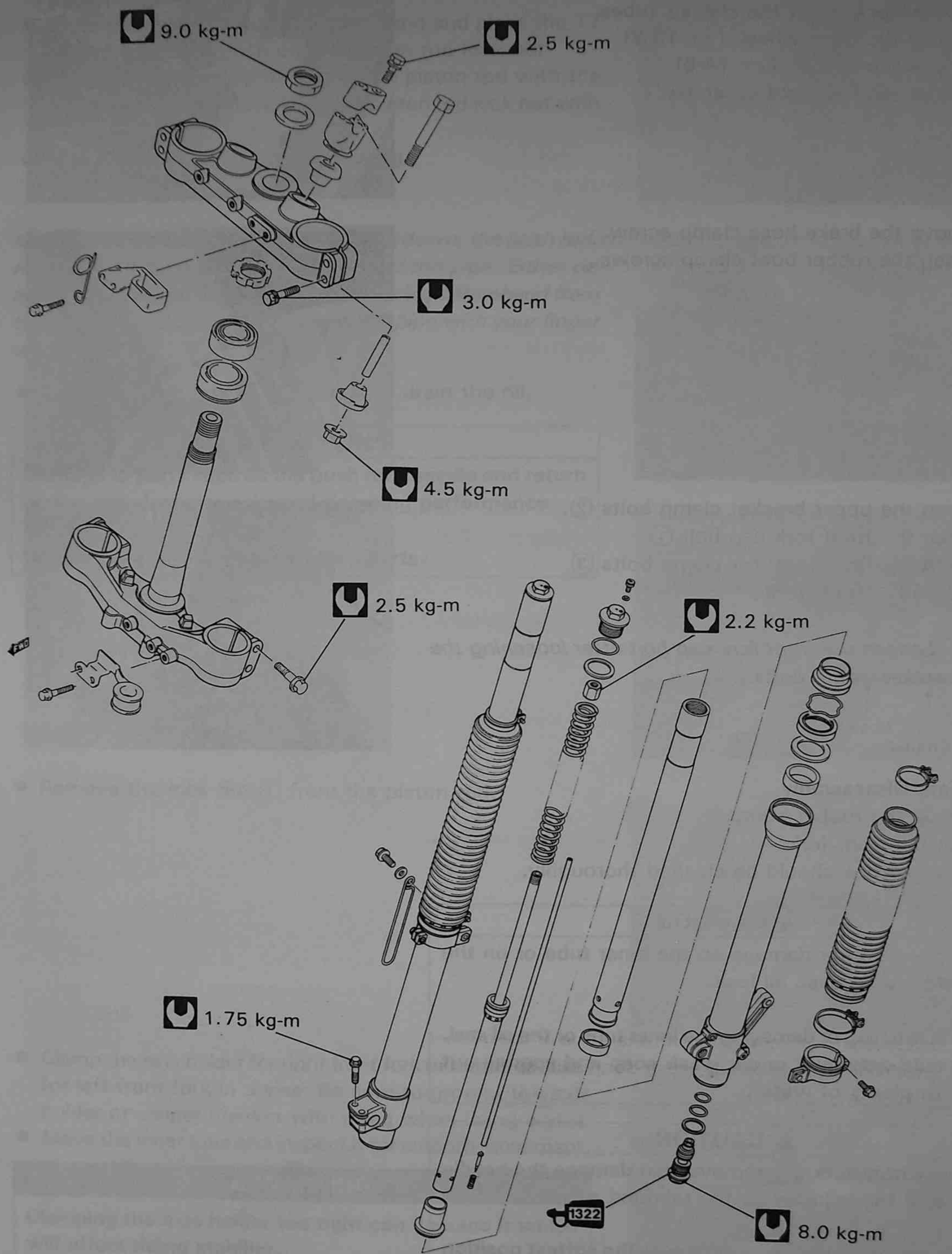

FRONT FORK

Front Fork Dismounting

- Place a block under the chassis tubes.
- Remove the front wheel. (☞ 13-2)
- Remove the caliper. (☞ 14-5)
- Remove the headlight assembly.

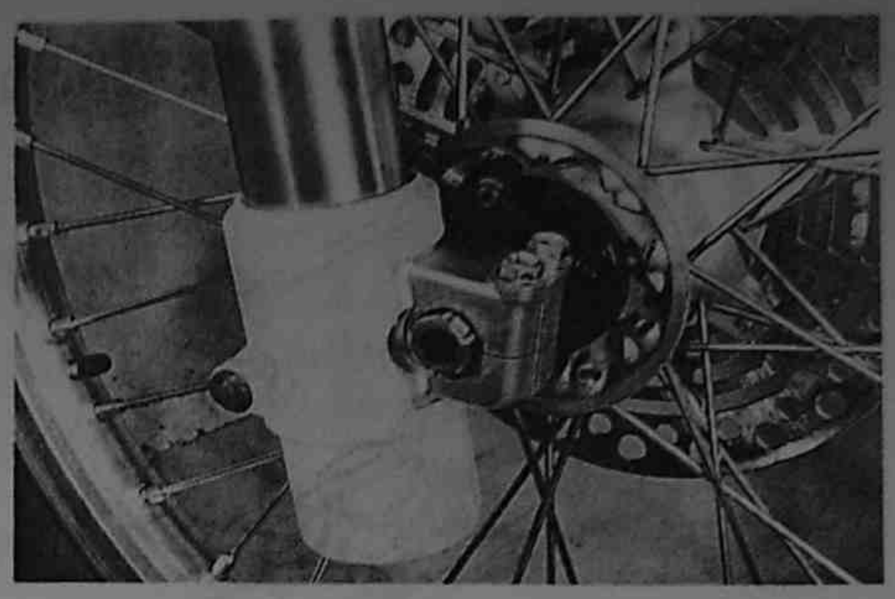

- Remove the brake hose clamp screw.
- Loosen the rubber boot clamp screws.

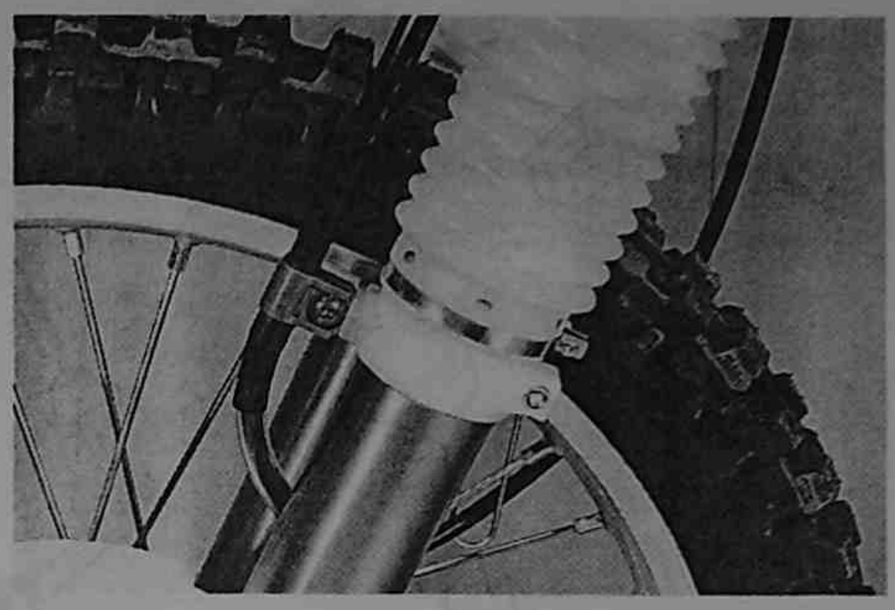

- Loosen the upper bracket clamp bolts ②.
- Loosen the front fork cap bolt ①.
- Loosen the lower bracket clamp bolts ③.
- Remove the front forks.

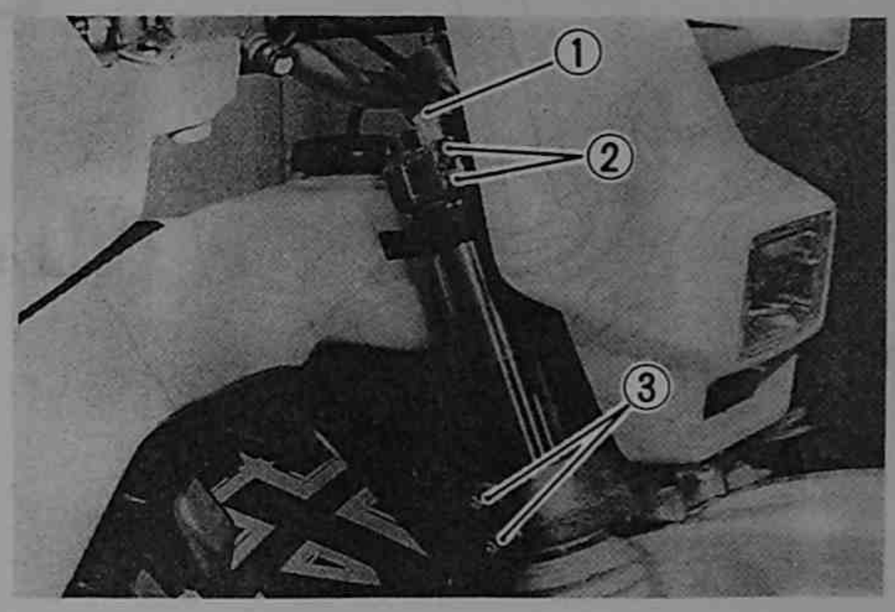

NOTE: Loosen the front fork cap bolt after loosening the upper bracket clamp bolts.

Front Fork Disassembly

- Remove the rubber boot.
- Clean the front fork.
- The inner tube should be cleaned thoroughly.

⚠ CAUTION

Scratches or other damage on the inner tube or on the oil seal lip will cause oil leak.

Avoid scratching or damaging the inner tube or the oil seal. Use a mild detergent or car wash soap and sponge out dirt with plenty of water.

⚠ CAUTION

Improper front fork cap removal can damage the needle section of the adjuster on the rebound side.

Set the rebound damping adjuster to the softest position (by turning counterclockwise) before removing the fork cap. Be sure to record the adjuster click position.

- Remove the fork cap bolt from the inner tube and lower the inner tube slowly.
- Press down the spring with your hand and place the 17 mm open end wrench on the piston rod lock nut.
- Remove the fork cap bolt from the piston rod with the 17 mm wrench while holding the piston rod lock nut with the wrench.
- Remove the washer and the spring.

NOTE: When the fork is turned upside down, the push rod, needle and return spring will fall out of the pipe. Either remove the push rod, needle and return spring beforehand from the rod pipe or cover the end of the rod pipe with your finger while working.

- Compress the fork 8—10 times to drain the oil.

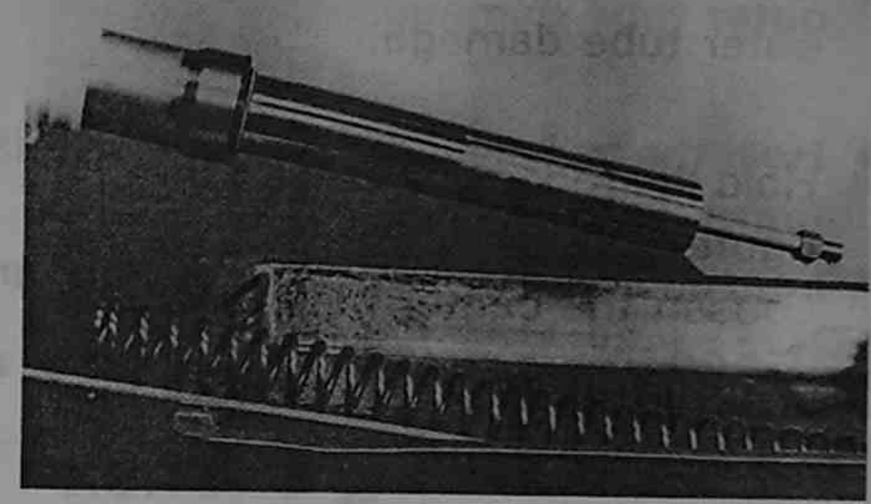

⚠ CAUTION

Damage to parts such as the push rod, needle and return spring can decrease rebound damping performance.

Be careful not to damage or lose parts.

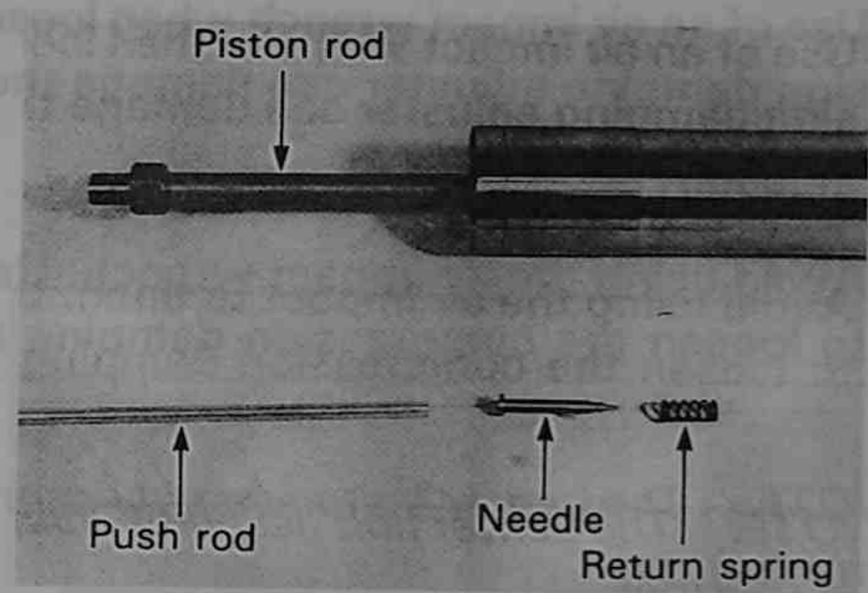

- Remove the lock nut ① from the piston rod.

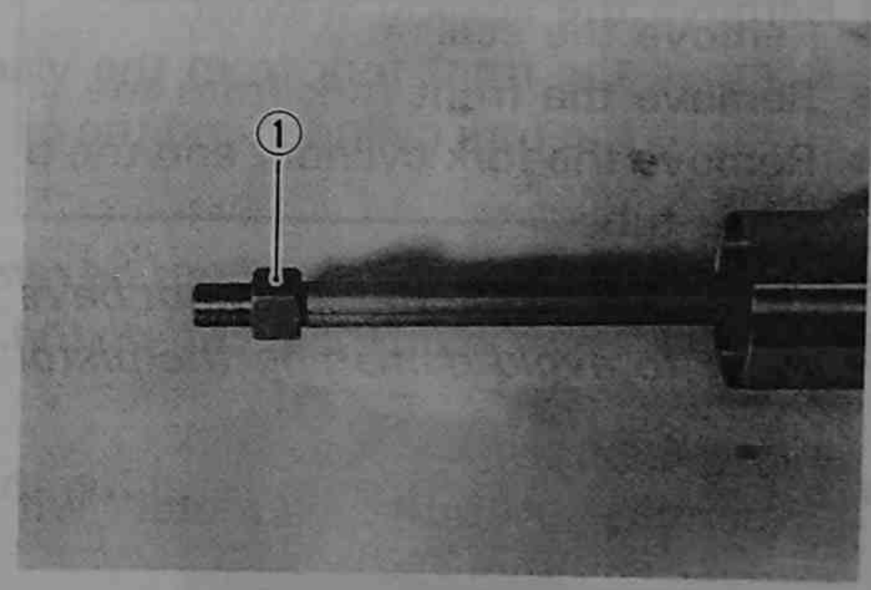

- Clamp the axle holder for right front fork or caliper bracket for left front fork in a vise. Be sure to protect the axle holder or caliper bracket with a rag when using a vise.
- Move the inner tube and inspect it for smooth movement.

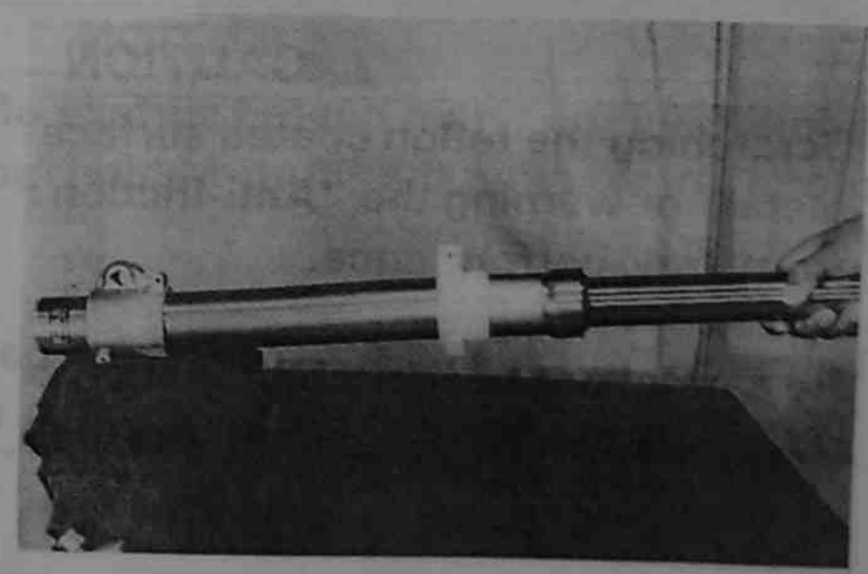

⚠ WARNING

Clamping the axle holder too tight can damage it which will affect riding stability.

Do not clamp the axle holder too tight.

- Remove the dust seal ① and the stopper ring ②.

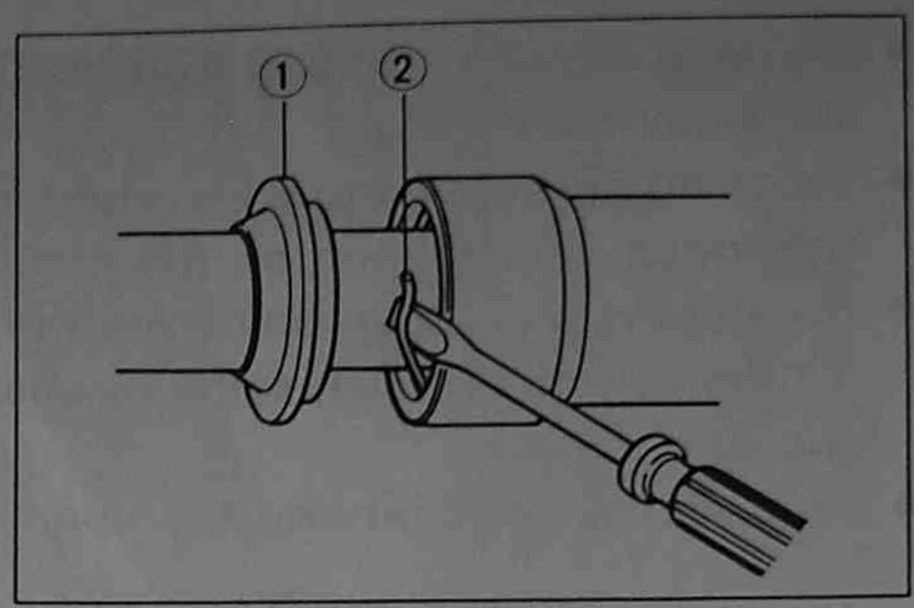

⚠ CAUTION

Scratches on the inner tube could cause oil leaks.

Avoid scratching when removing.

- Remove the inner tube by compressing and then pulling.
- Repeat this process several times in succession.
- In case of abnormalities, check for bending of the inner tube, wear or damage on the bushing.
- If the inner tube and bushing have no damage, check the outer tube damage.

- Hold the fork cylinder with the special tools shown in the figure.
- Loosen the center bolt assembly and remove it.

TOOL 09940-52890: Front fork inner rod holder

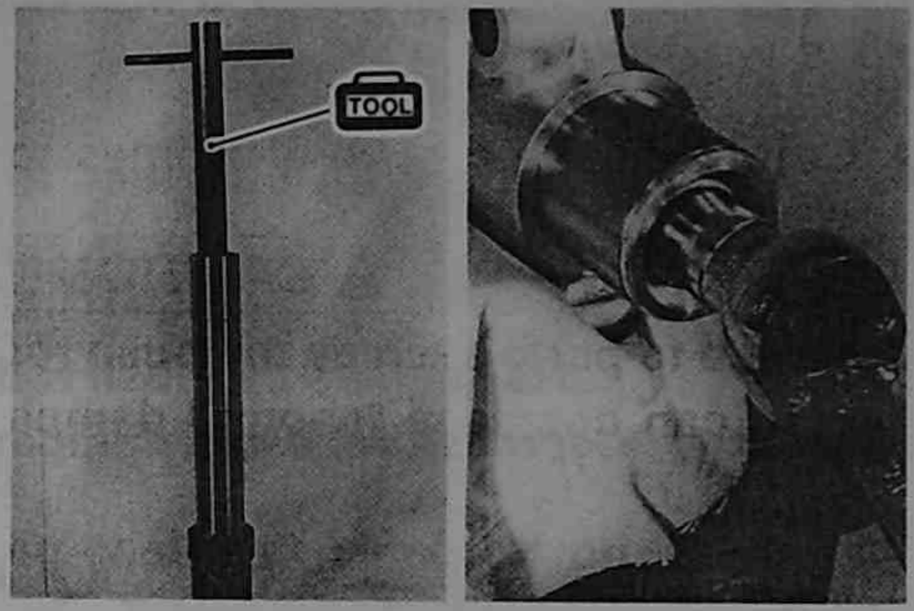

⚠ CAUTION

Use of an air impact wrench when loosening the compression damping adjuster can damage the inner parts of the adjuster.

Avoid using the air impact wrench. Use the special tools to loosen the compression damping adjuster.

NOTE: The center bolt assembly cannot be disassembled any further.

- Remove the sealing washer.
- Remove the front fork from the vise.
- Remove the fork cylinder and the oil lock piece from the outer tube.

NOTE: The piston rod must not be removed from the fork cylinder to avoid damaging the piston.

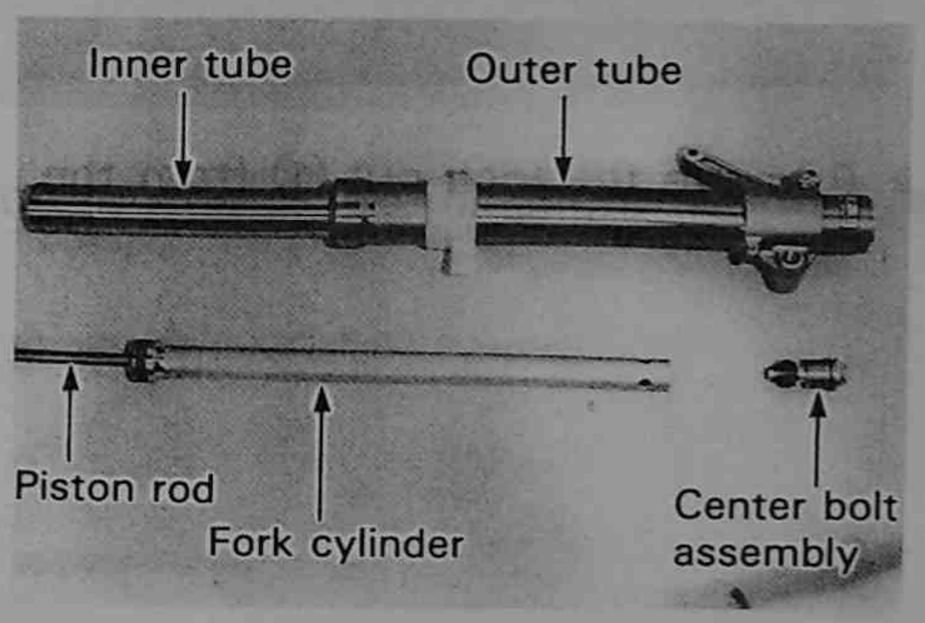

- Open the ''Anti-friction metal'' with a flat-blade screwdriver and remove it.

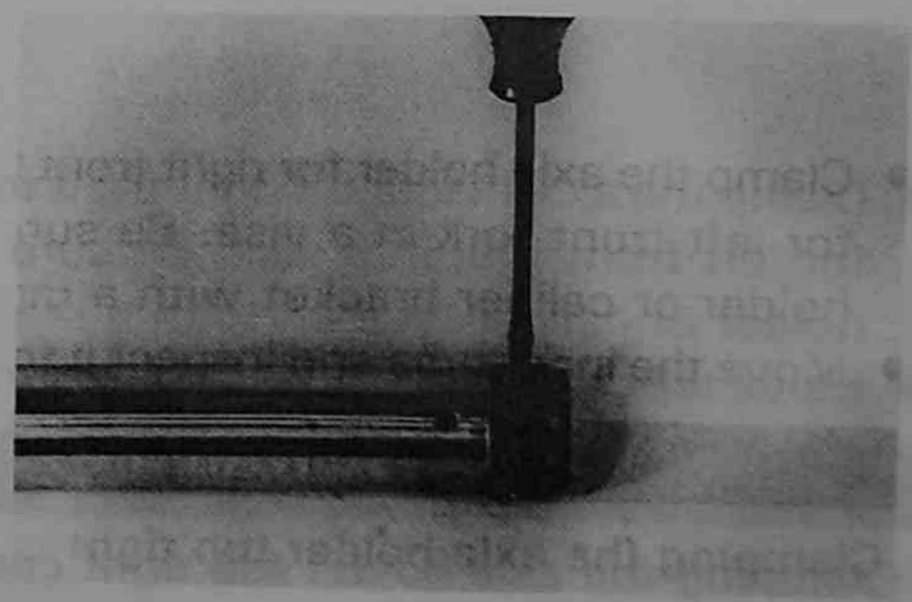

⚠ CAUTION

Scratching the teflon coated surface of the ''Anti-friction metal'' or warping the ''Anti-friction metal'' can decrease front fork performance.

Be careful not to scratch the teflon coat. Do not open the ''Anti-friction metal'' any more than necessary.

- Remove the following parts from the inner tube:
  Dust seal ①
  Stopper ring ②
  Oil seal ③
  Washer ④
  Anti-friction metal No.1 ⑤
  Anti-friction metal No.2 ⑥

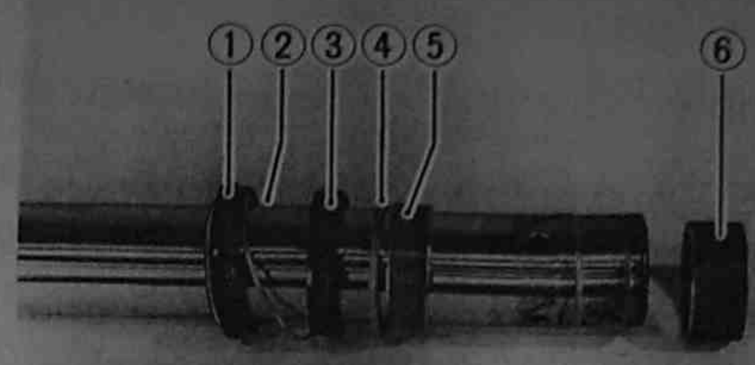

Front Fork Inspection

- Inspect the fork cap bolt and the center bolt assembly for damage, especially in the damping adjusters. If they are damaged, replace them with new ones.
- Inspect the inner tube for scratches or bending. If it has scratches or is bent, replace it with a new one.
- Inspect the outer tube for warping. If it is warped all the way to the inner side, replace it with a new one.
- Inspect the fork cylinder, the piston rod, the oil lock piece for wear, scratches or bends. If they have scratches or are bent, replace them with new ones.
- Inspect the ''Anti-friction metals'' for wear or damage. If they are worn or damaged, replace them with new ones.
- Inspect metal particles on the ''Anti-friction metals''. If they are not clean, clean them with a nylon brush and fork oil.
- Measure the free length of the front fork spring.

Service limit: 515.0 mm (20.3 in)

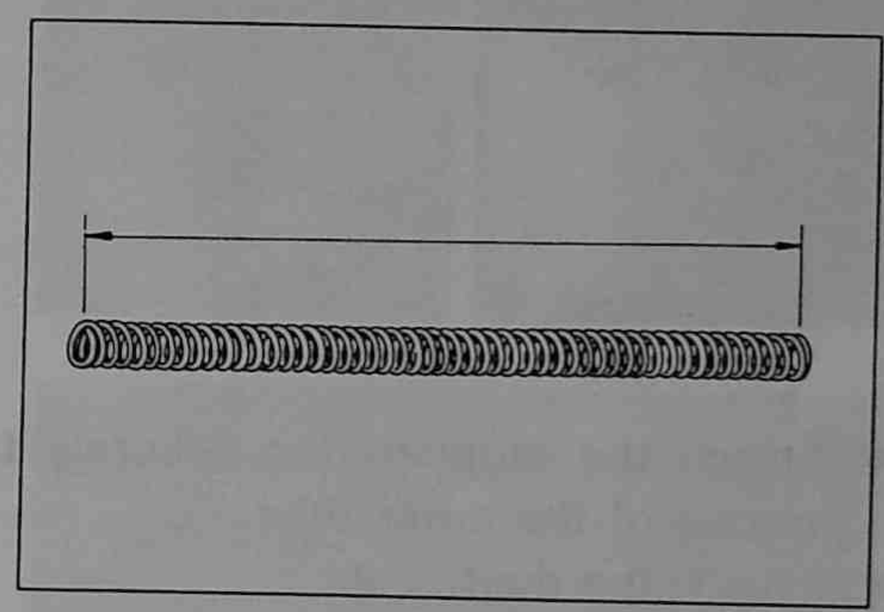

Front Fork Reassembly

- Clean all fork parts.
- Apply front fork oil to the oil seal lip and the dust seal.
- Attach the following parts to the inner tube:
  Vinyl cover (to the inner tube end)
  New dust seal
  Stopper ring
  New oil seal

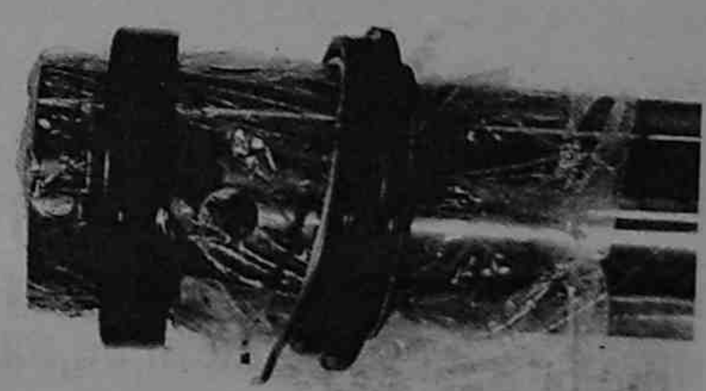

⚠ CAUTION

Scratches on the oil seal lip can cause oil leaks.

When installing the seal, place a vinyl cover over the bushing attachment groove and edges of the inner tube to avoid damage to the seal lip.

NOTE: The side of the oil seal that has a mark should face the dust seal.

- Remove the vinyl cover and then install the washer and the ''Anti-friction metals''.
- Apply front fork oil to the ''Anti-friction metals''.

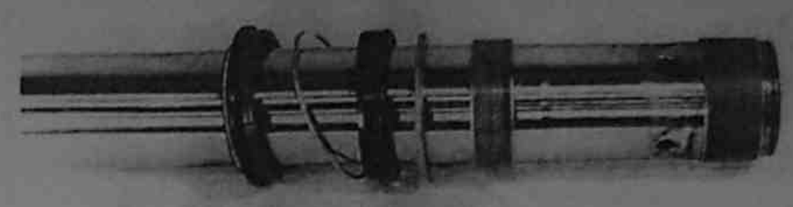

NOTE: Inspect the ''Anti-friction metals'' for burrs. If there is a burr, remove it with a knife, taking care not to peel off the teflon coating. If the ''Anti-friction metals'' has a large crack or excessive play after installing it, replace it with a new one.

⚠ CAUTION

Teflon coating damage on the ''Anti-friction metals'' can decrease front fork performance.

When installing the ''Anti-friction metals'', be careful not to damage the teflon coating.

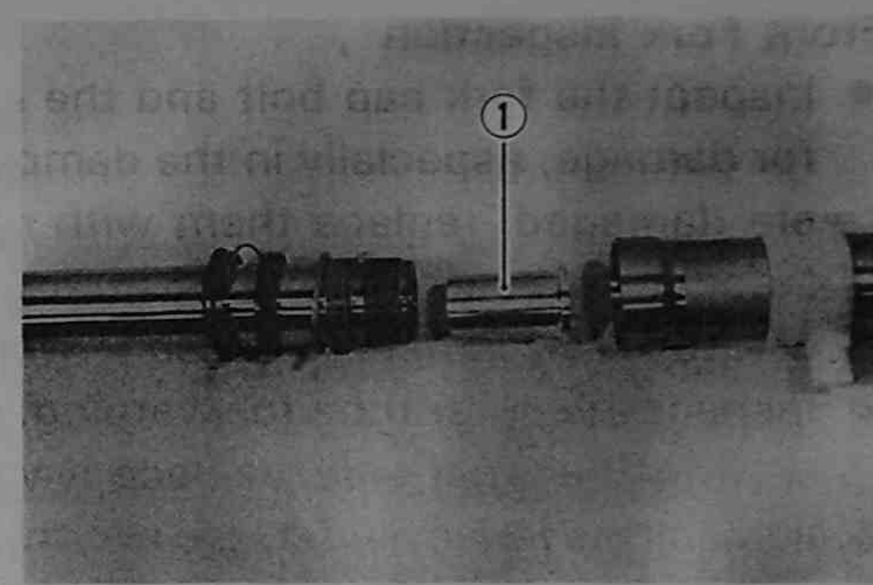

- Apply fork oil on the outer surface of the oil seal to make it easy to fit.
- Insert the oil lock piece ① and the inner tube into the outer tube.
- Install the oil seal with the special tool until the stopper ring groove of the outer tube can be seen.

TOOL 09940-52861: Front fork oil seal installer set

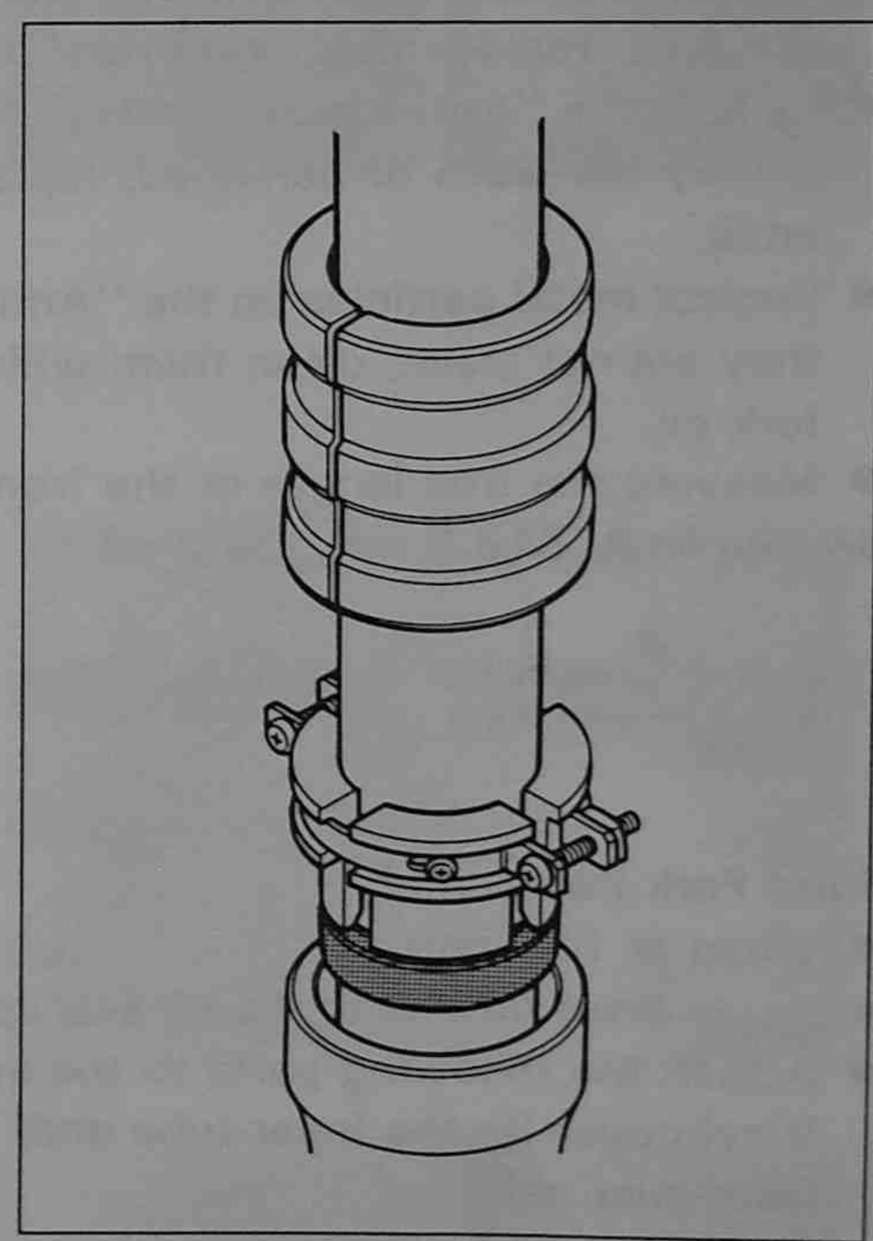

- Attach the stopper ring securely to the stopper ring groove of the outer tube.
- Attach the dust seal.

NOTE: After attaching the dust seal, make sure that there are no cracks around the circumference of the seal. Cracks could allow water, mud and the like to enter and cause an oil leak.

⚠ CAUTION

Use of grease as a substitute for fork oil when installing the oil seal can result in an oil leak. Applying grease to the dust seal and oil seal can cause dirt to accumulate and damage the dust seal lip and oil seal lip.

Use only a thin coat of fork oil on the oil seal.

- Insert the fork cylinder ① slowly in the inner tube and confirm that it is securely inserted in the hole on the bottom of the outer tube.

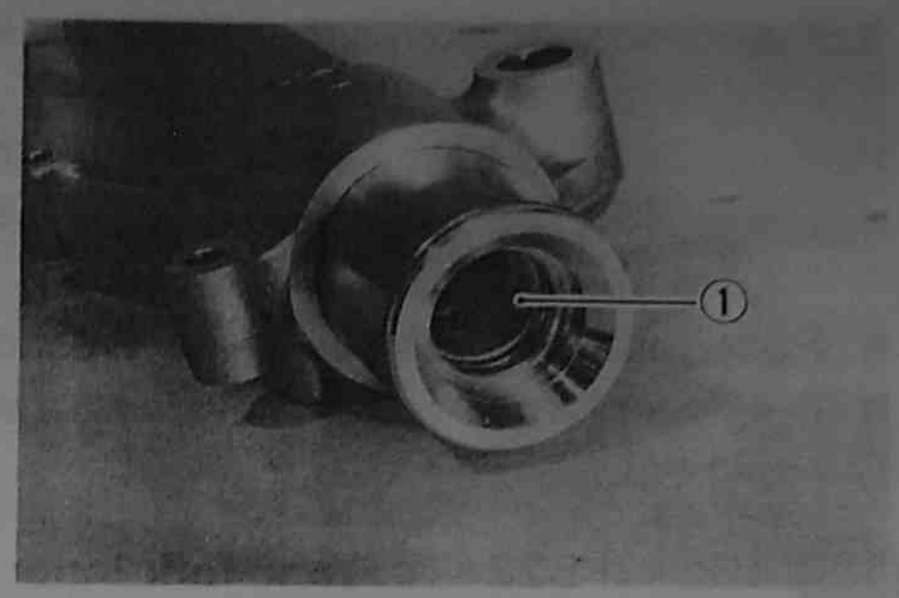

- Clamp the axle holder for the right front fork or the caliper bracket for the left front fork in a vise. Be sure to protect the axle holder or the caliper bracket with a rag when clamping with the vise.

⚠ WARNING

Clamping the axle holder too tight can damage it and it will affect riding stability.

Do not clamp the axle holder too tight.

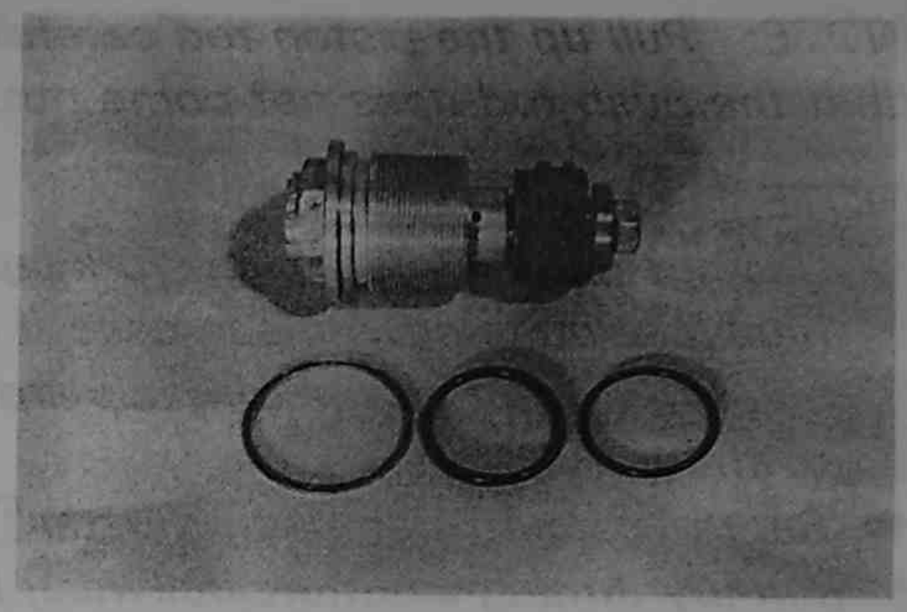

- Apply a small quantity of the thread lock "1322" to the center bolt thread.
- Attach a new sealing washer and new O-rings to the center bolt assembly and tighten it to the fork cylinder with the special tool.
- Set the circlip.

TOOL 09940-52890: Front fork inner rod holder

Center bolt assembly: 80 N·m (8.0 kg-m, 58.0 lb-ft)

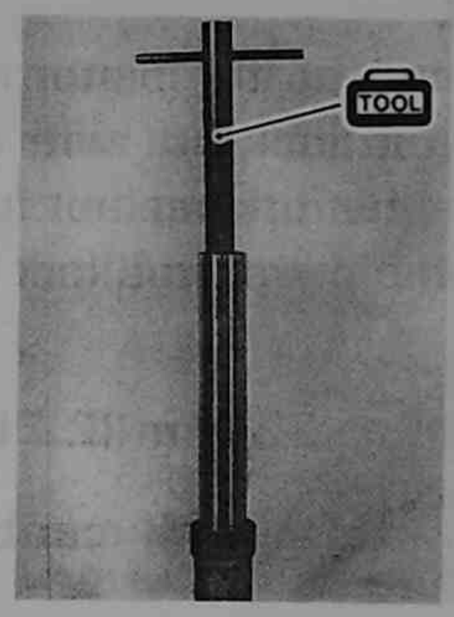

- Drive the lock nut onto the piston rod by hand until it stops.
- Make sure at least 14 mm (0.55 in) piston rod thread is exposed on the piston rod end.

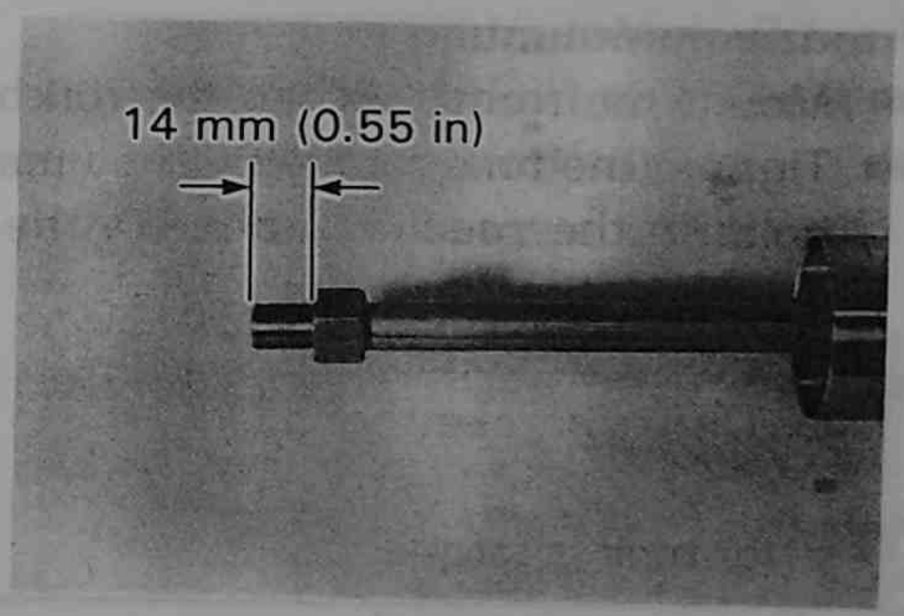

- Insert the return spring, needle (being careful about direction) and the push rod into the piston rod.

⚠ CAUTION

Damage to the parts such as the push rod, needle and return spring can decrease rebound damping performance.

Be careful not to damage or lose parts.

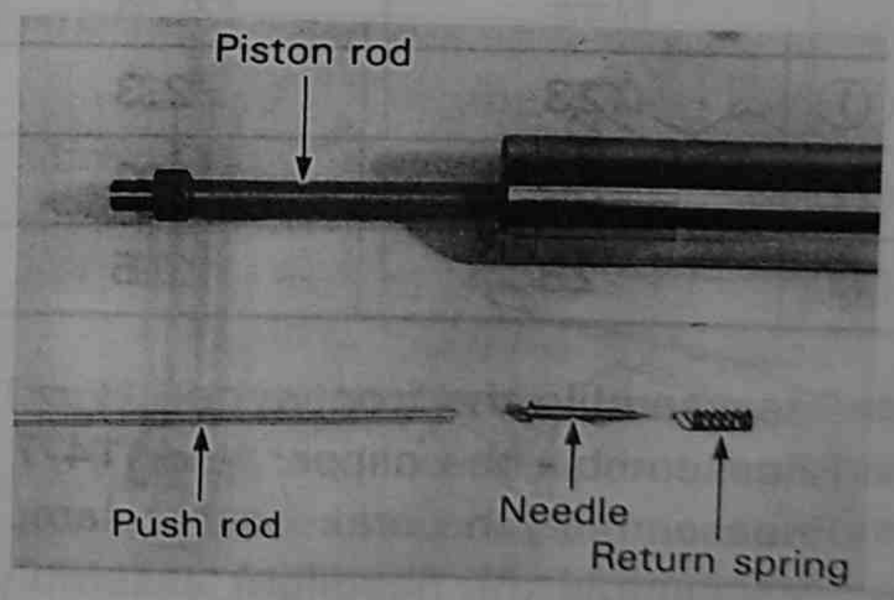

- Pour the specified fork oil into the inner tube while pulling the piston rod up. (☞ 4-8)
- Bleed the fork oil of air by moving the inner tube and the piston rod several strokes. (☞ 4-8)
- Adjust the fork oil level. (☞4-8)
- Reinstall the spring and the washer to the piston rod.
- Pull the piston rod all the way up with the special tool. (☞4-9)

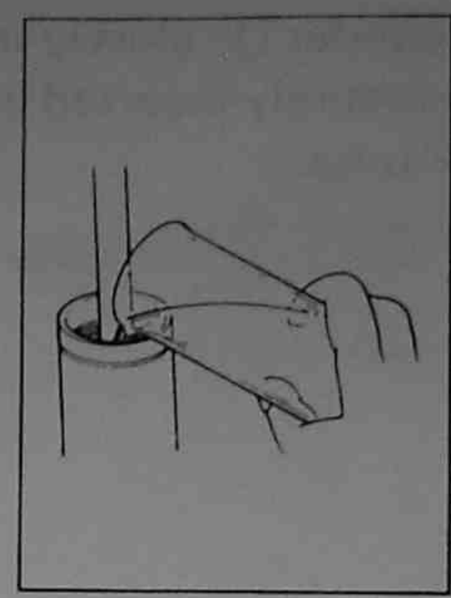

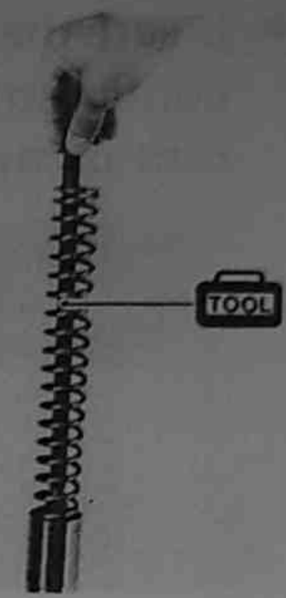

TOOL 09940-52841: Front fork inner rod holder

NOTE: Pull up the piston rod carefully while taking care that the push rod does not come out.

NOTE:

- *Damage to the O-ring on the fork cap can cause oil leaks. Replace with a new one in case of damage. Apply fork oil to the O-ring of the fork cap and attach the fork cap to the outer tube.*
- *Set the rebound damping adjuster ① to the softest position (by turning counterclockwise) before reassembling the fork cap bolt.*

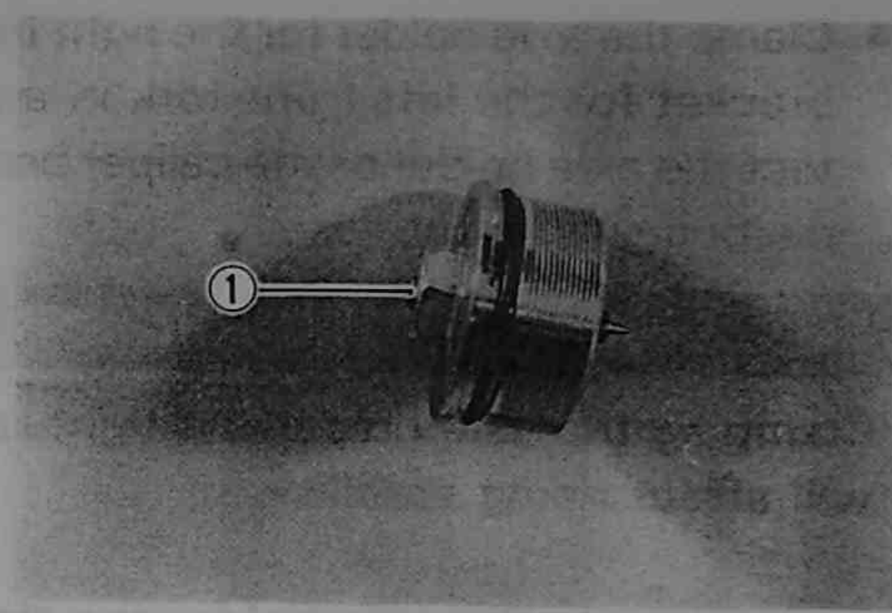

- Fit the fork cap bolt to the piston rod.
- Hold the piston rod lock nut with a 17 mm open end wrench and drive the fork cap bolt fully to the piston rod thread. Tighten the piston rod lock nut to the specified torque.

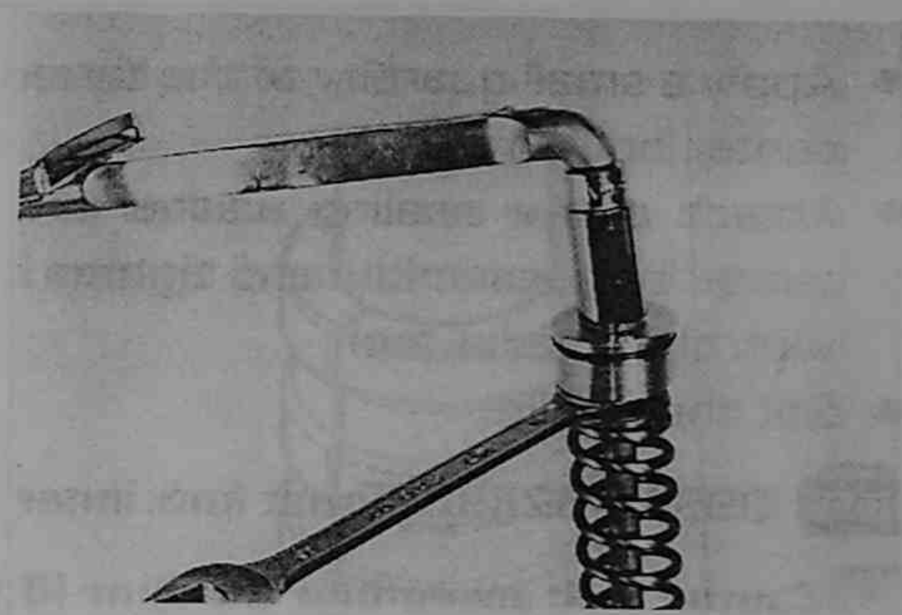

Piston rod lock nut: 22 N·m (2.2 kg-m, 16.0 lb-ft)

- Fit the inner tube to the fork cap bolt and temporarily tighten it.

Front Fork Mounting

- Mount the front forks to the fork brackets.
- Tighten the fork cap bolts, the upper and lower bracket bolts to the specified torque in the following order;
  1. Lower bracket bolts ③
  2. Fork cap bolts ①
  3. Upper bracket bolts ②

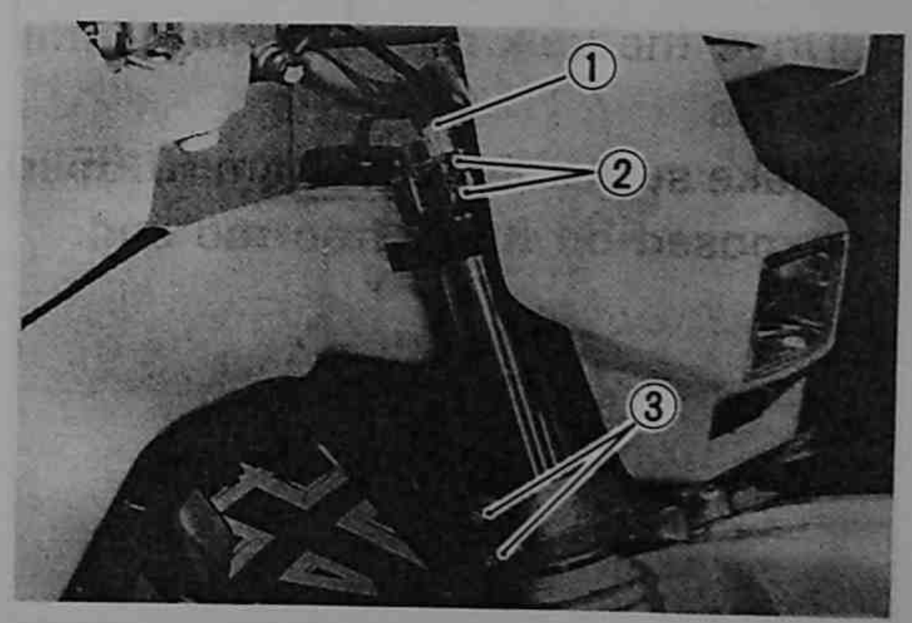

Tightening torque

	N·m	kg-m	lb-ft
①	23	2.3	16.5
②	30	3.0	21.5
③	25	2.5	18.0

- Reassemble the front wheel. (☞ 13-2)
- Reassemble the caliper. (☞ 14-7)
- Reassemble the brake hose clamp. (☞ 15-2)
- Reassemble the headlight assembly.

STEERING

Steering Removal

- Remove the front wheel.(☞ 13-2)
- Remove the caliper. (☞ 14-5)
- Remove the front fender.
- Remove the headlight assembly.
- Remove the handlebar clamp bolts and remove the handlebar.

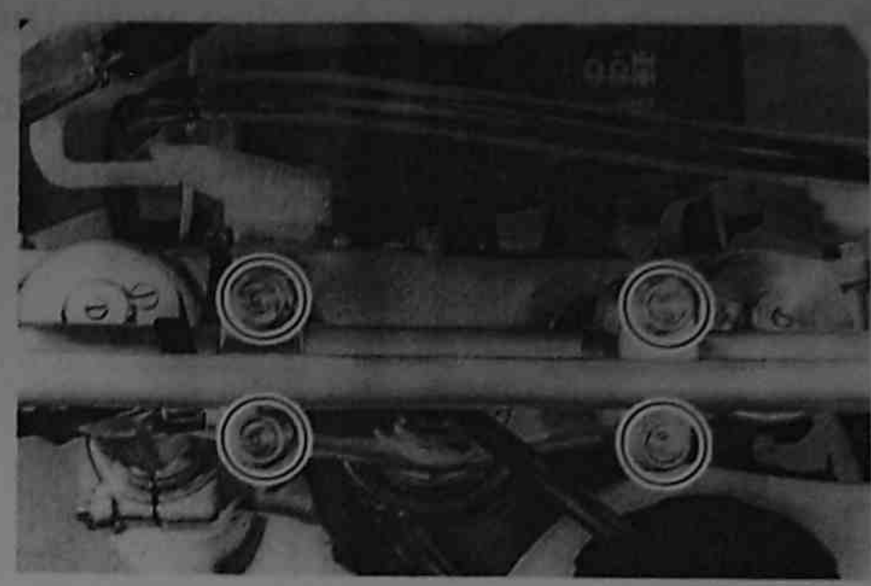

- Remove the front fork. (☞15-2)
- Remove the steering stem head nut.
- Remove the upper bracket.

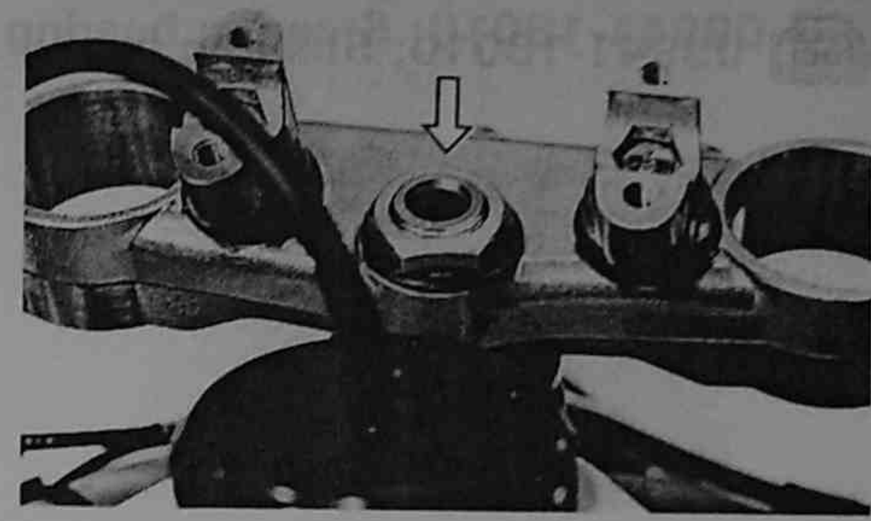

- Remove the steering nut with the special tool.

TOOL **09940-14911: Steering nut socket wrench**
09940-14960: Attachment

- Remove the lower bracket.

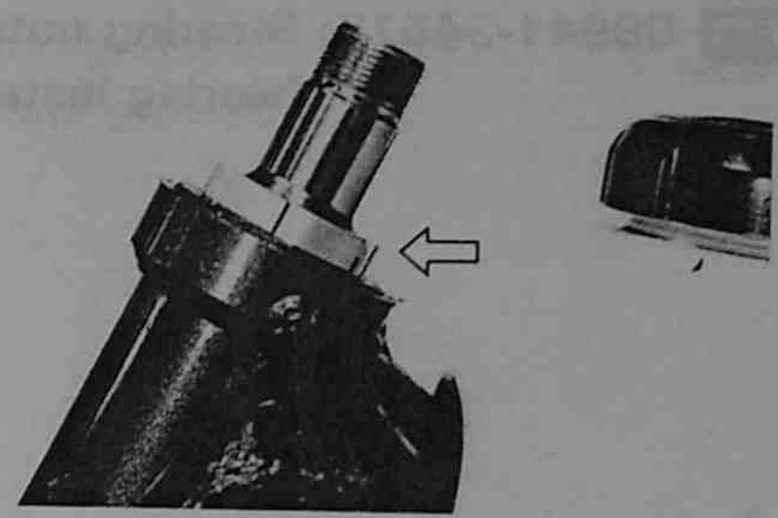

Steering Inspection

- Inspect the bearing races for wear.
- Inspect the needle bearings for wear.
- Inspect the steering stem for distortion.

Steering Bearing Replacement

NOTE: Replace the outer race and bearing as set.

- Remove the upper and lower outer races with the special tools.

TOOL **09941-54911: Steering race remover**
09941-74910: Steering bearing installer

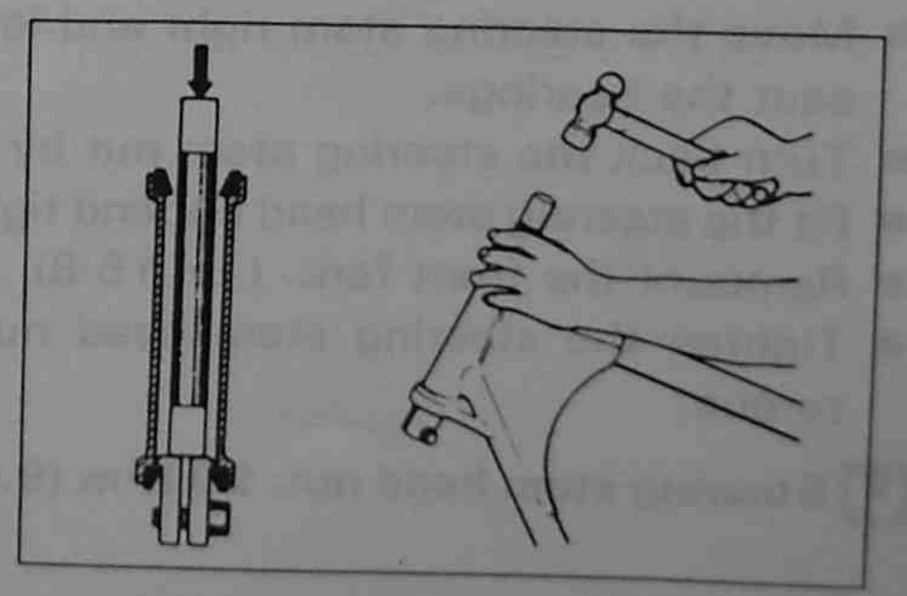

- Remove the lower bearing with the special tool.

TOOL 09941-84510: Bearing inner race remover

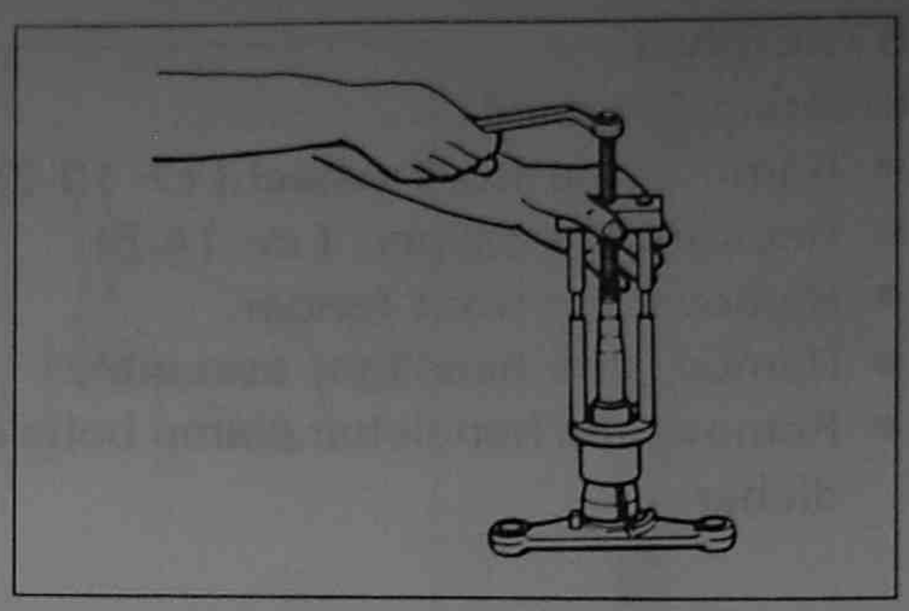

- Fit the lower bearing with the special tool.

TOOL 09941-18010: Steering bearing installer

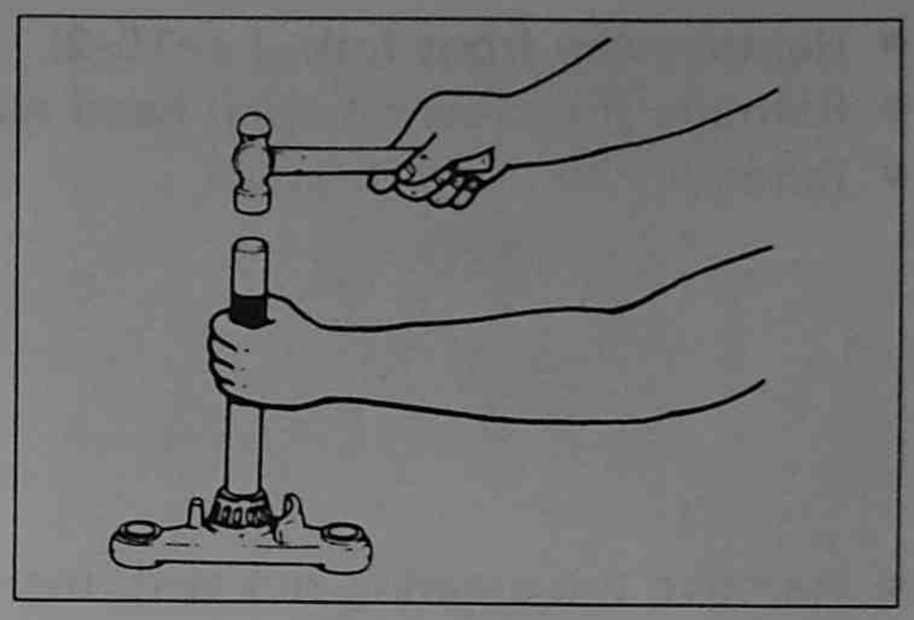

- Fit the upper and lower outer races with the special tool.

TOOL 09941-34513: Steering outer race and swingarm bearing installer

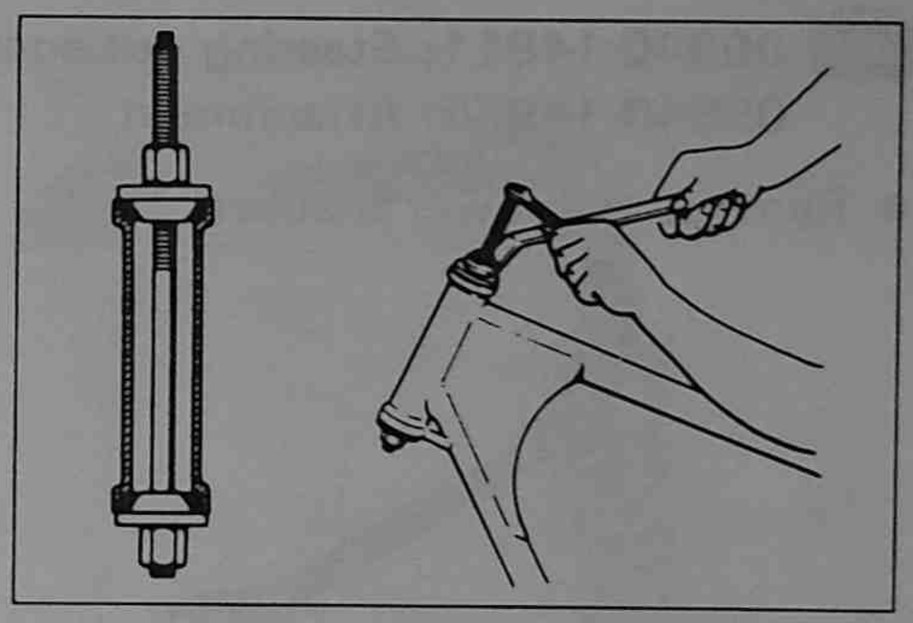

Steering Reassembly

- Apply grease to the bearings.
- Fit the steering stem, upper bearing, dust seal and steering stem nut.
- Tighten the steering stem nut to the specified torque.

TOOL 09940-14911: Steering nut socket wrench
09940-14960: Attachment

Steering stem nut: 45 N·m (4.5 kg-m, 32.5 lb-ft)

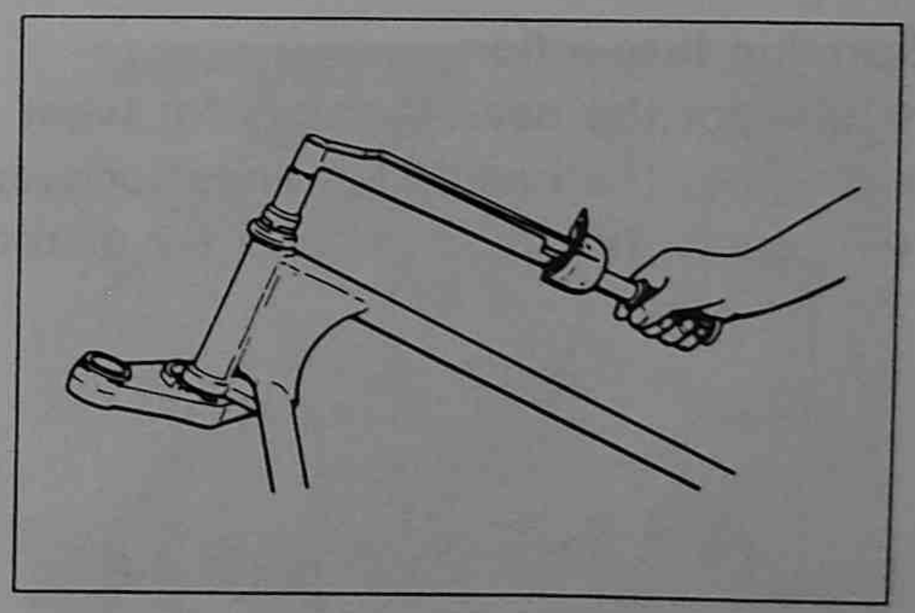

- Move the steering stem right and left several times to seat the bearings.
- Turn back the steering stem nut by ¼ to ½ turn.
- Fit the steering stem head nut and tighten it temporarily.
- Remount the front fork. (☞ 15-8)
- Tighten the steering stem head nut to the specified torque.

Steering stem head nut: 90 N·m (9.0 kg-m, 65.0 lb-ft)

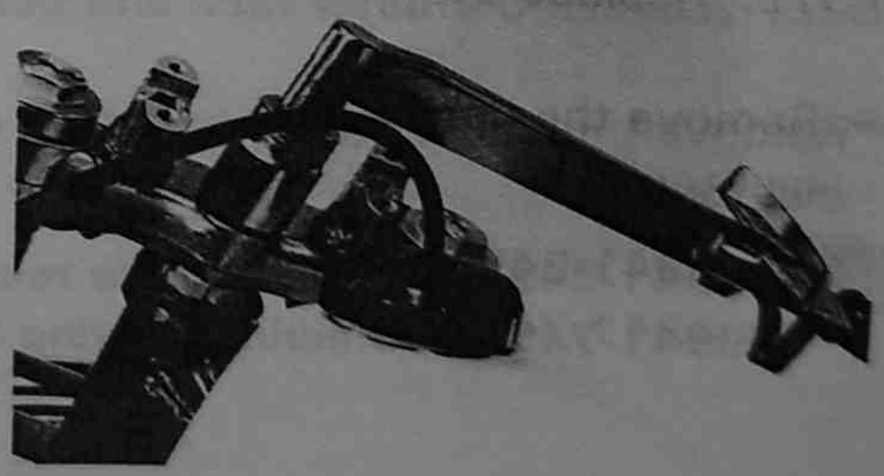

- Reassemble the front wheel. (☞ 13-2)
- Reassemble the handlebar.

- Rock the front fork forward and backward to ensure that the steering has no play.
- Inspect the steering for smooth movement so that the handlebar can move right and left under its own weight.

REAR SUSPENSION

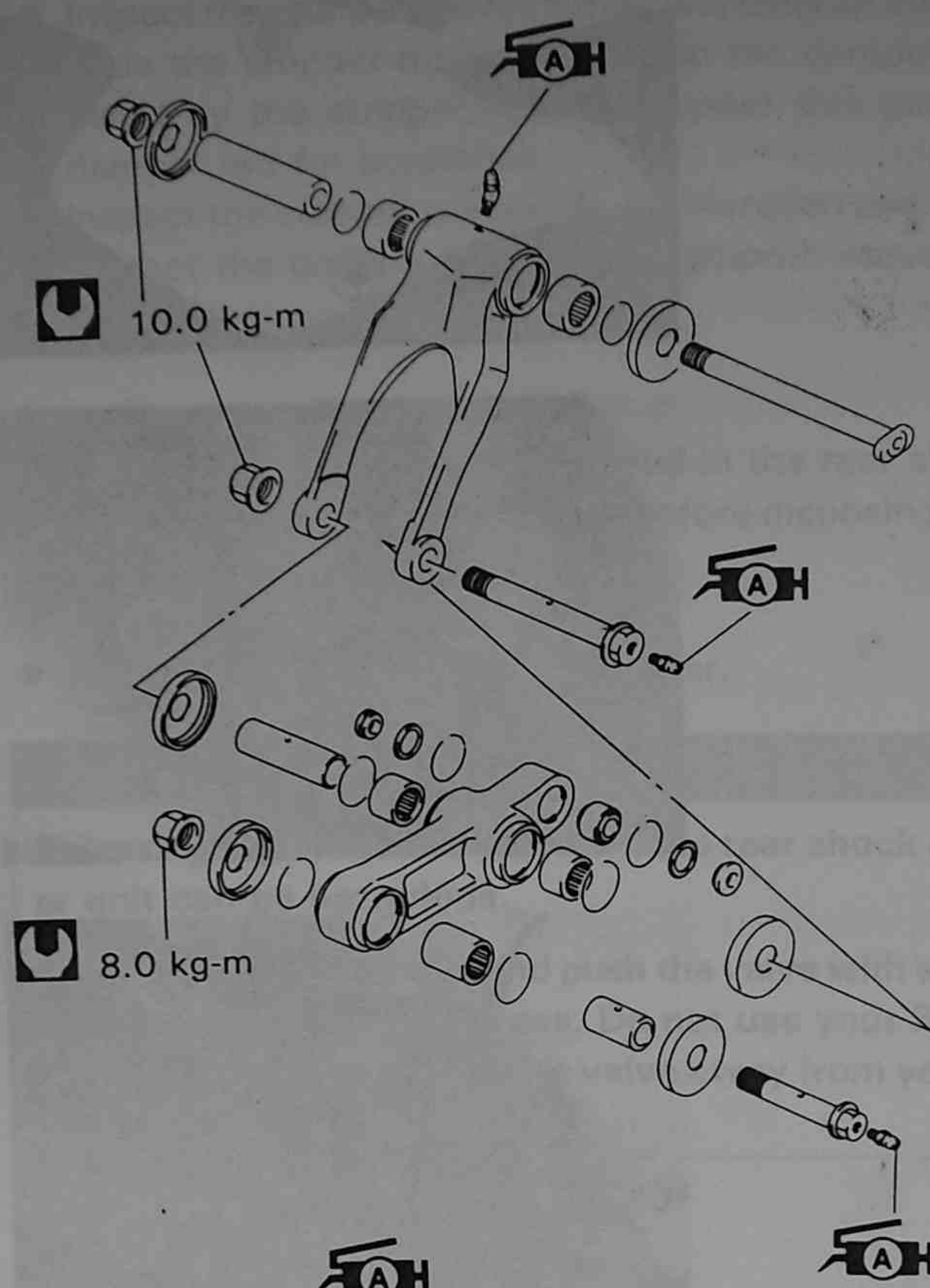

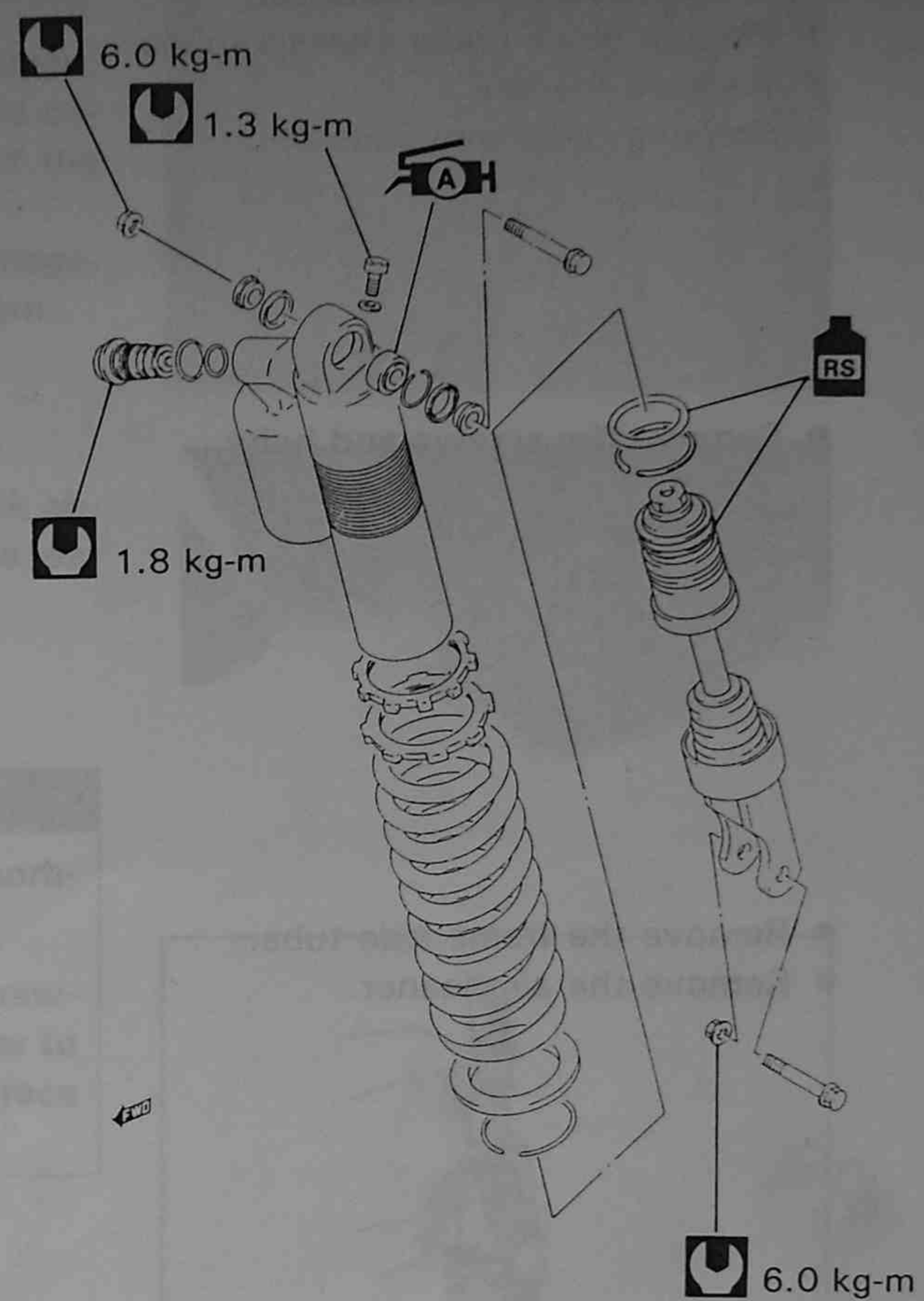

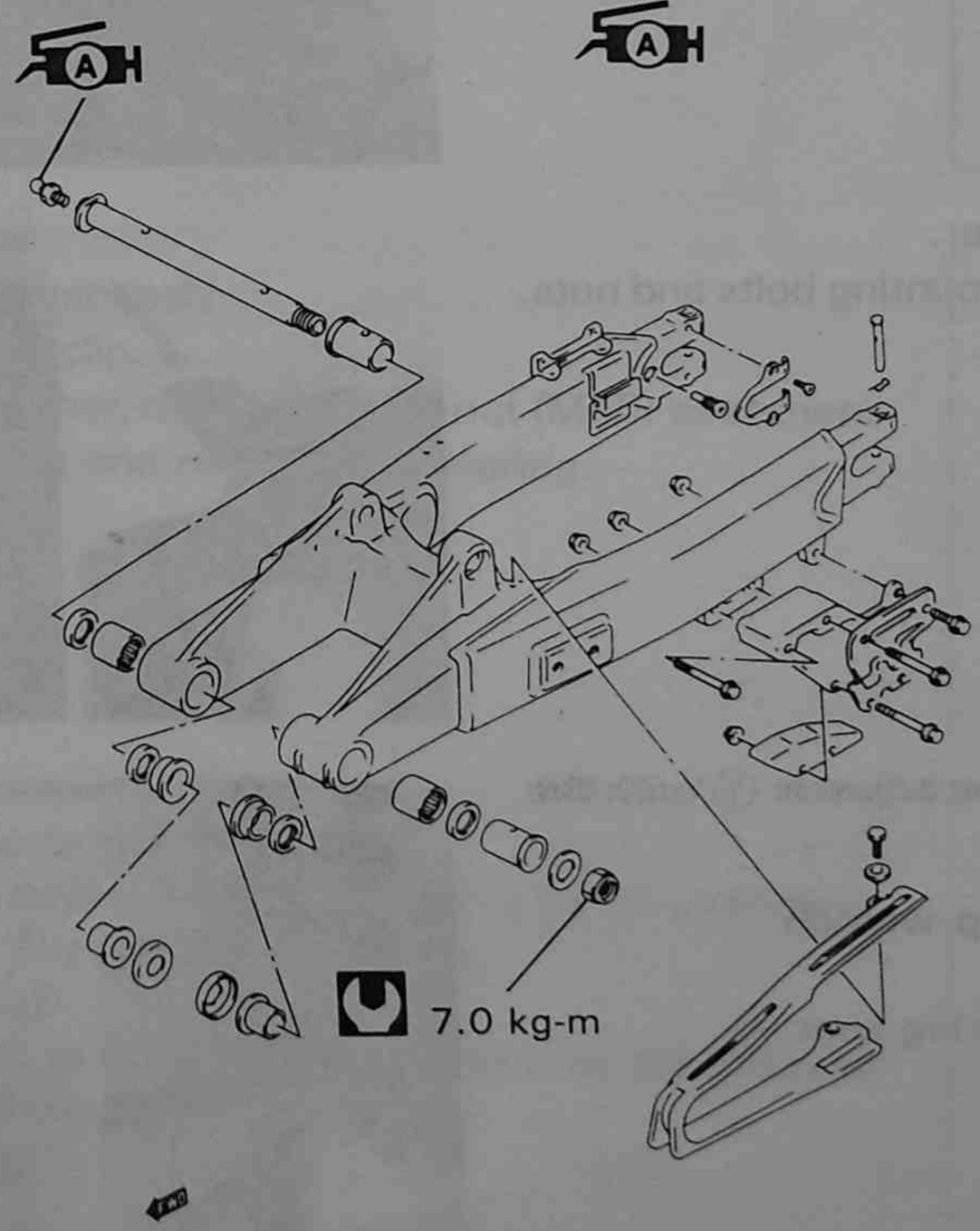

16

REAR SHOCK ABSOBER

Rear Shock Absorber Removal

- Place a block under chassis tubes.
- Remove the seat.
- Remove the frame covers.

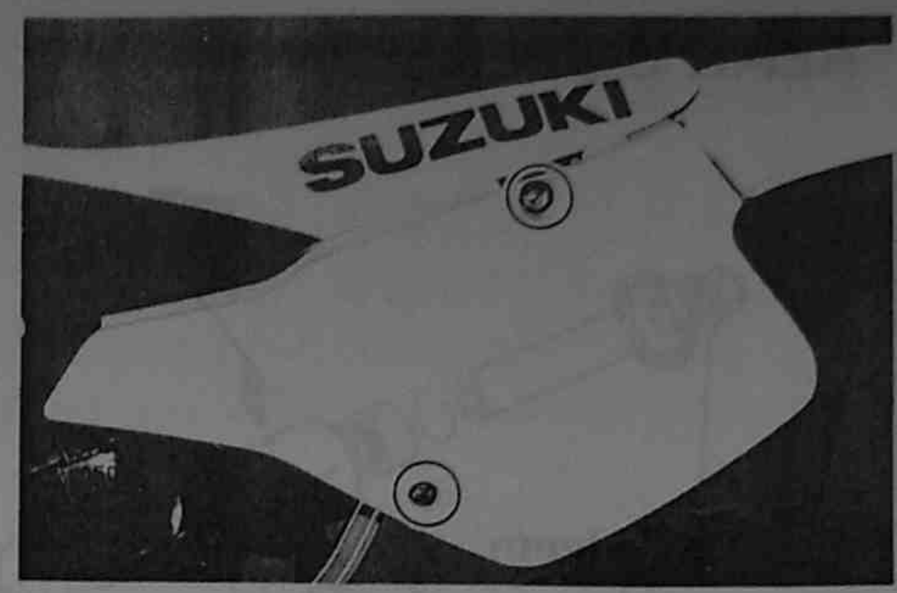

- Remove the screws and bolts.

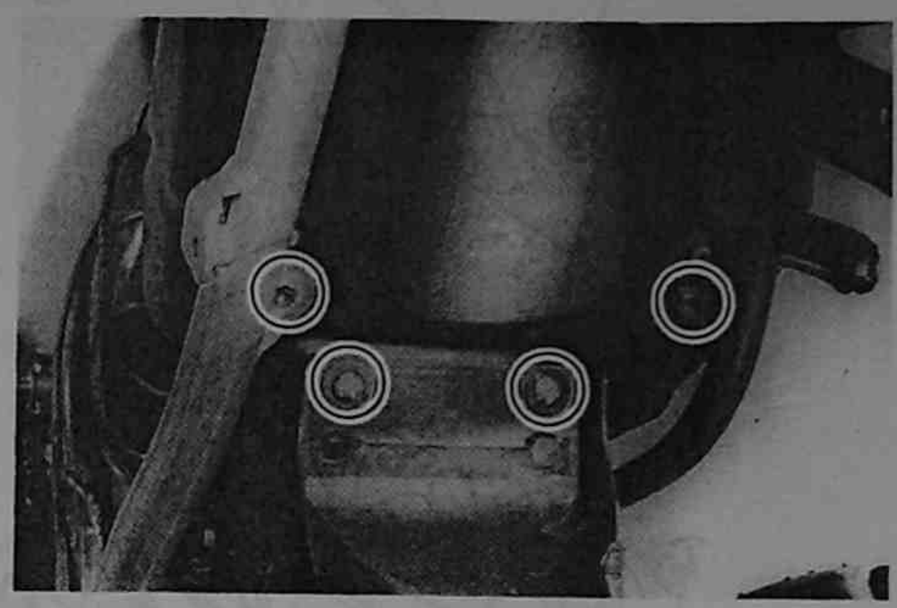

- Remove the frame side tube.
- Remove the air cleaner.

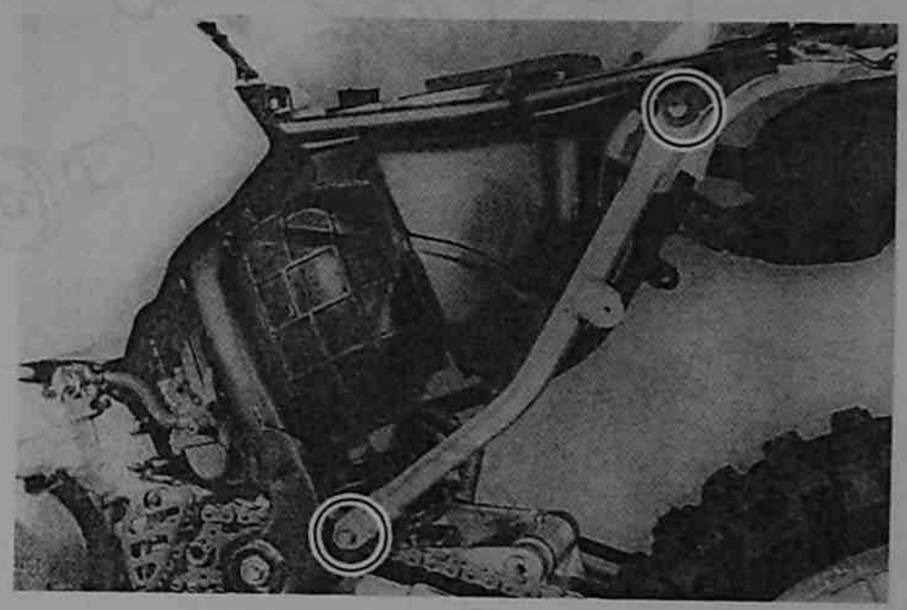

- Remove the air cleaner dust cover.
- Remove the rear shock absorber mounting bolts and nuts.
- Remove the rear shock absorber.

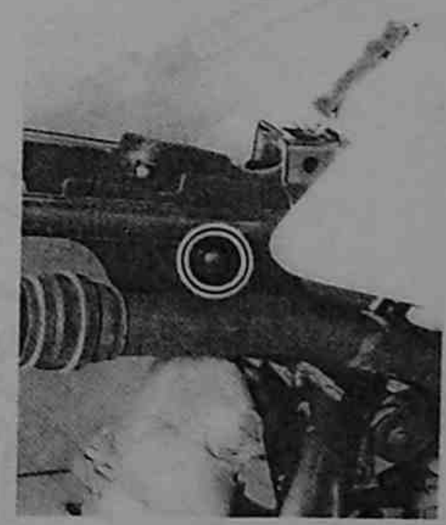

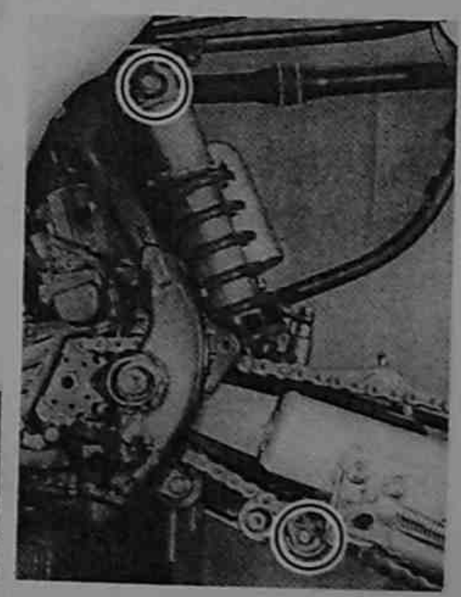

- Loosen the lock nut ② and turn the adjuster ① with the special tool.

TOOL 09910-60611: Universal clamp wrench

- Remove the circlip ③ and the spring seat ④.
- Remove the spring.

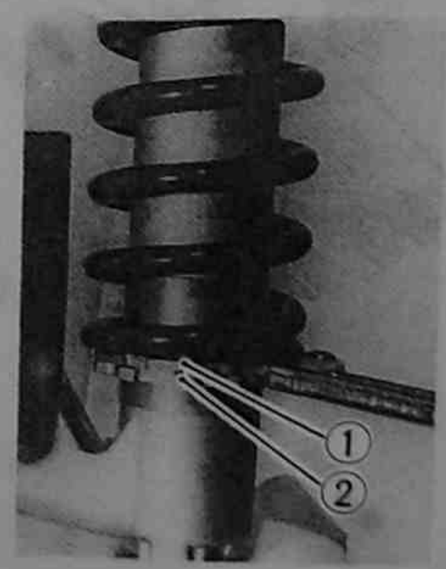

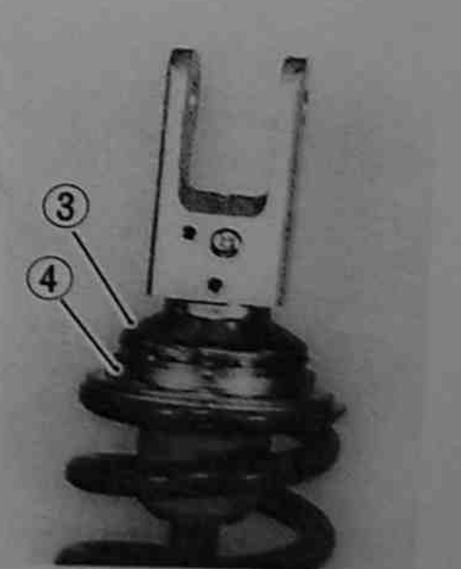

Rear Shock Absorber Inspection

- Inspect the rear suspension for oil leaks.
- Inspect the damper rod for bends and smooth movement.
- Slide the stopper rubber and clean the damper rod covered by the stopper rubber. Inspect this part of the damper rod for scratches.
- Inspect the stopper rubber for deterioration and damage.
- Inspect the bearing for play and smooth movement.

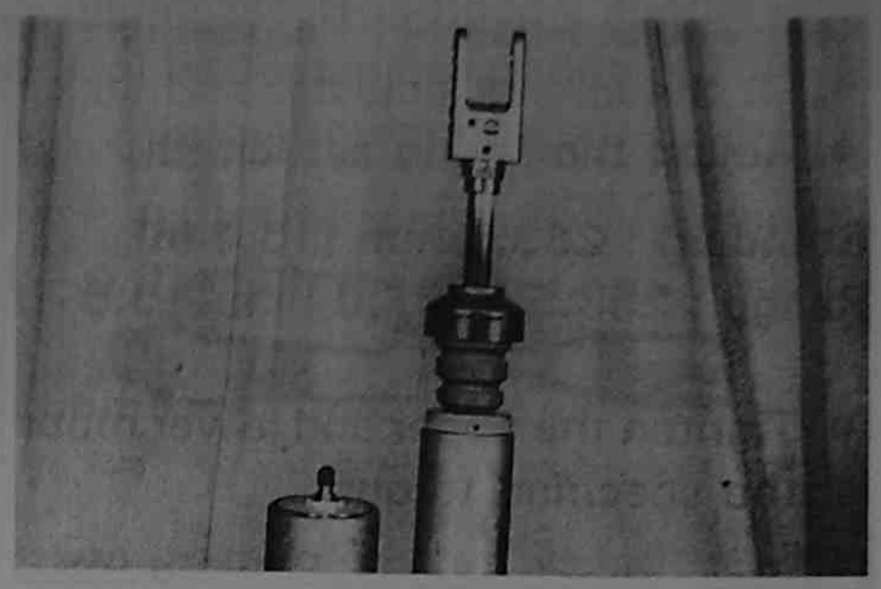

Rear Shock Absorber Disposal

High pressure nitrogen gas is sealed in the rear shock absorber unit. Be sure to release gas before disposing the rear shock absorber unit.

- Remove the valve cap.
- Press the valve with a screwdriver.

⚠ WARNING

Releasing high pressure gas from the rear shock absorber unit can be hazardous.

Place a rag over the valve and push the valve with a screwdriver to release nitrogen gas. Do not use your finger to push the valve, and direct the valve away from your face and body.

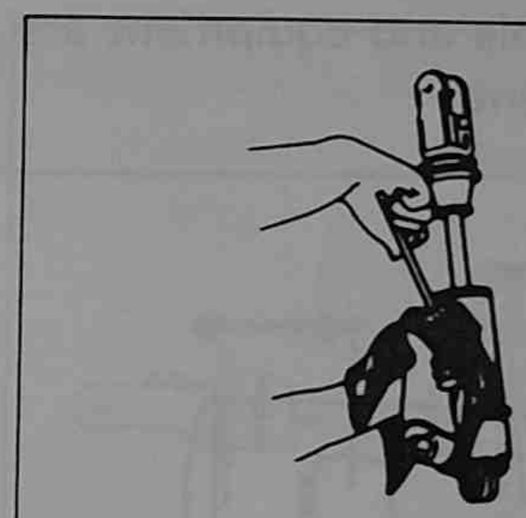

Bearing Removal

- Remove the dust seals.
- Remove the circlip.
- Set a pipe, washer, bolt (M10) and nut (M10) as shown.
- Tighten the nut and remove the bearing.

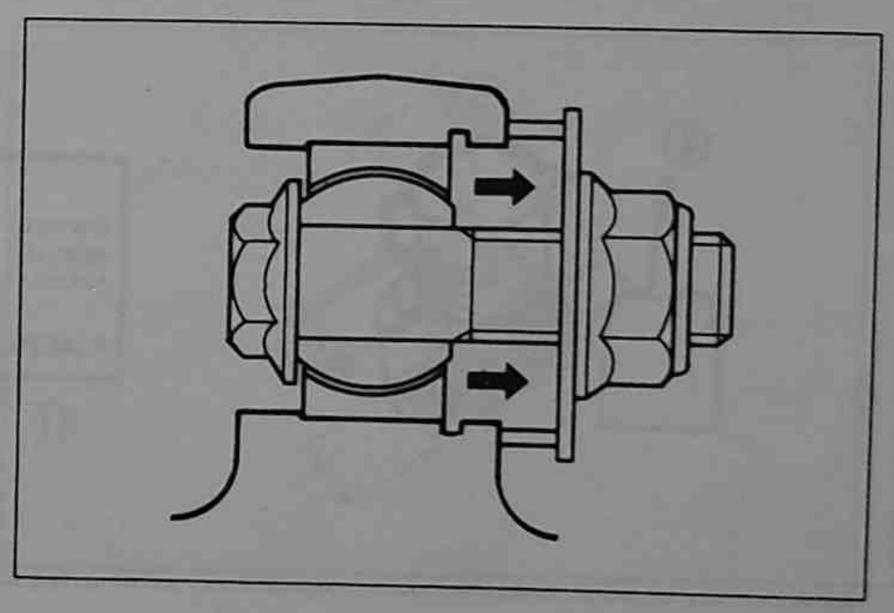

Bearing Replacement

- Apply grease to the bearing.
- Set pipes, washers, bolt (M10) and nut (M10) as shown.
- Tighten the nut and fit the bearing.
- Fit the circlip.
- Apply grease to the dust seal and fit it so the grooved side faces outside.

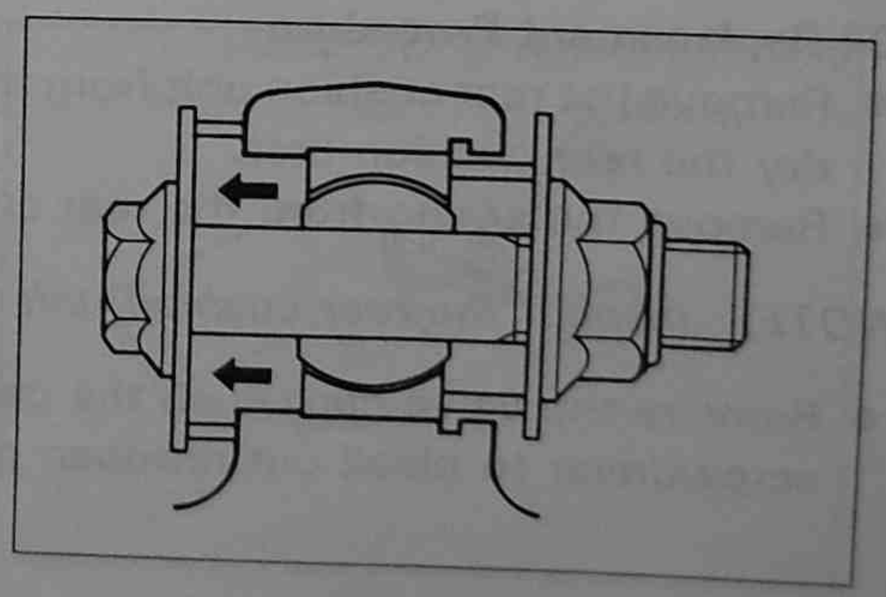

Rear Shock Absorber Reassembly

- Fit the spring, adjuster and lock nut.
- Adjust the spring set length.

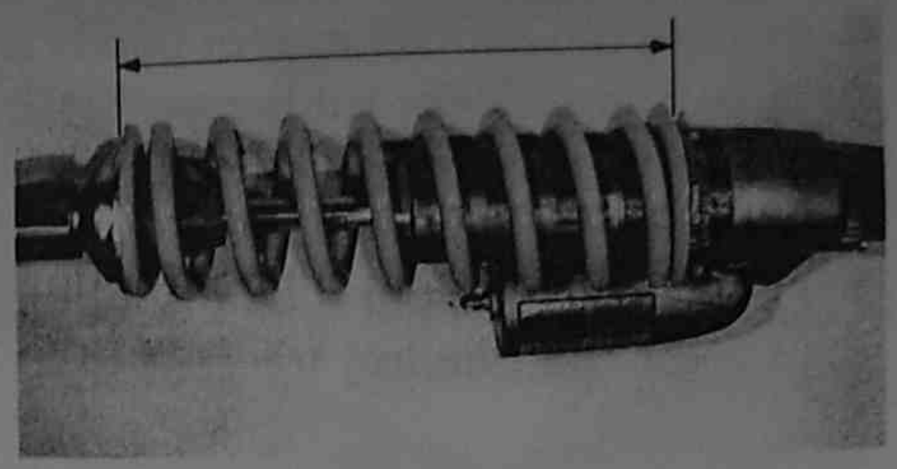

Standard : 263.7 mm (10.4 in)
Range : 253.5–267.0 mm (10.0–10.5 in)

- Tighten the upper and lower mounting bolts and nuts to the specified torque.

Rear shock absorber fitting nuts: 60 N·m (6.0 kg-m, 43.5 lb-ft)

- Reassemble the air cleaner.
- Reassemble the frame side tube.
- Reassemble the frame cover and seat.
- Tune the rear suspension. (☞ 4-13)

OIL REPLACEMENT PROCEDURE

Tools and Equipement

- Following tools and equipment are required to perform oil replacement.

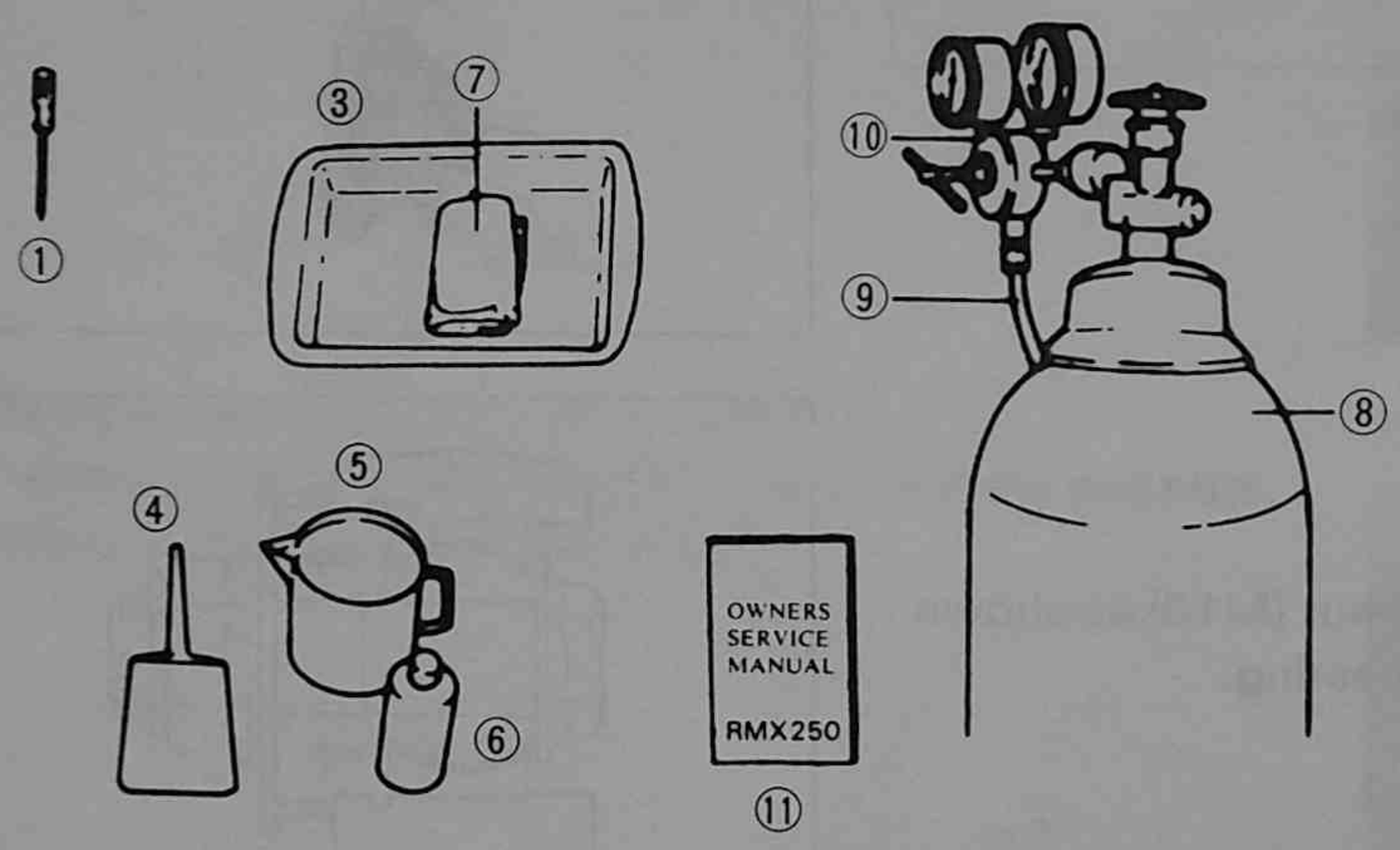

① Screwdriver or small punch
② Vise*
③ Drain Pan
④ Oilcan
⑤ Beaker
⑥ Specified Shock Oil (SS-25)
⑦ Rags
⑧ Nitrogen tank
⑨ Filler Hose and Nozzle
⑩ Regulator Assembly
⑪ Owner's Service Manual

* Not Shown in the illustration

Oil Replacement Procedure

- Remove the rear cushion unit from the frame. Clean and dry the rear cushion unit.
- Remove the spring from the rear cushion unit.

NOTE: Inspect the rear cushion unit for oil leak.

- Remove the valve cap. Push the gas valve core with a screwdriver to bleed out nitrogen gas.

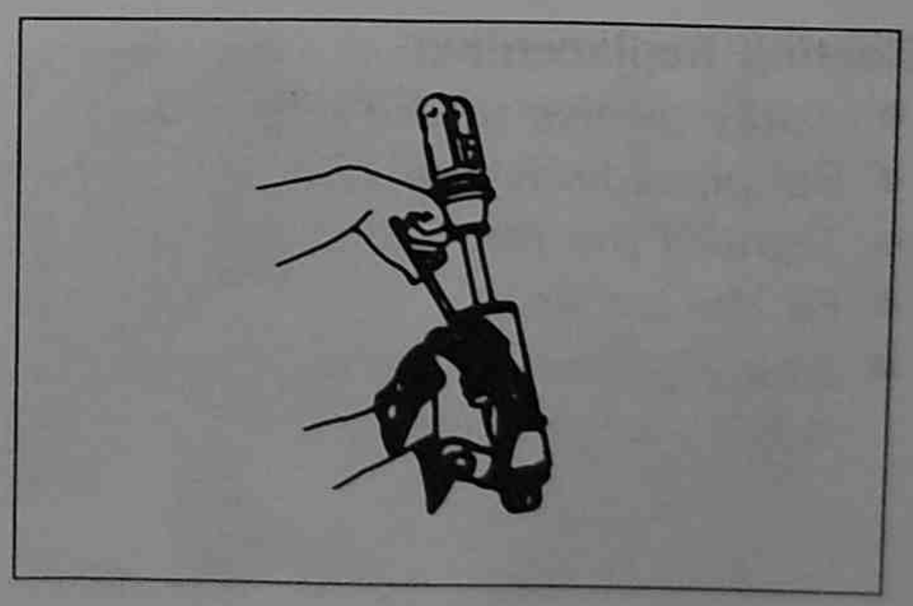

⚠ WARNING

Releasing high pressure gas from the rear shock absorber unit can be hazardous.

Never perform any servicing until the nitrogen gas pressure has been released from the rear cushion unit. When releasing the gas pressure, place a rag over the gas valve and use the tip of a screwdriver etc. to press the valve. Do not use your finger to depress the gas valve, and direct the valve away from your face and body.

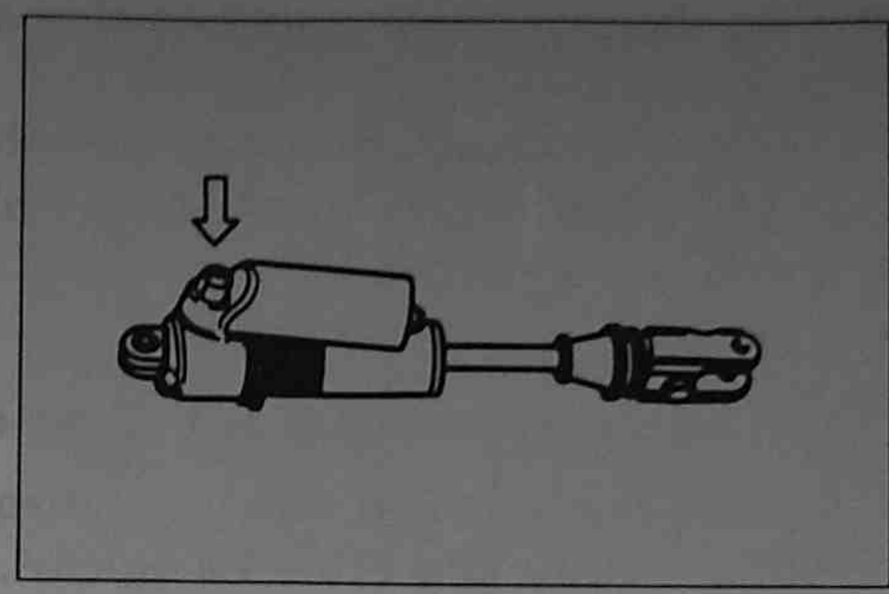

- Remove the compression adjuster assembly.
- Place a drain pan under the rear cushion unit. Move the rod and drain the oil.
- Push the valve core again to equalize the bladder to atmospheric pressure.

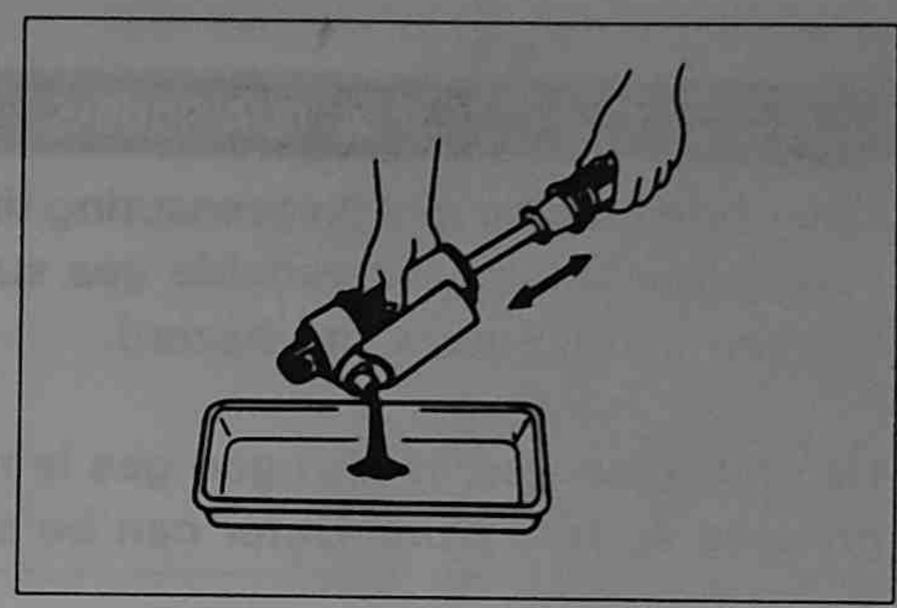

- Move the rod and pour the oil as shown.

NOTE: Be sure to extend the rod after filling the oil.

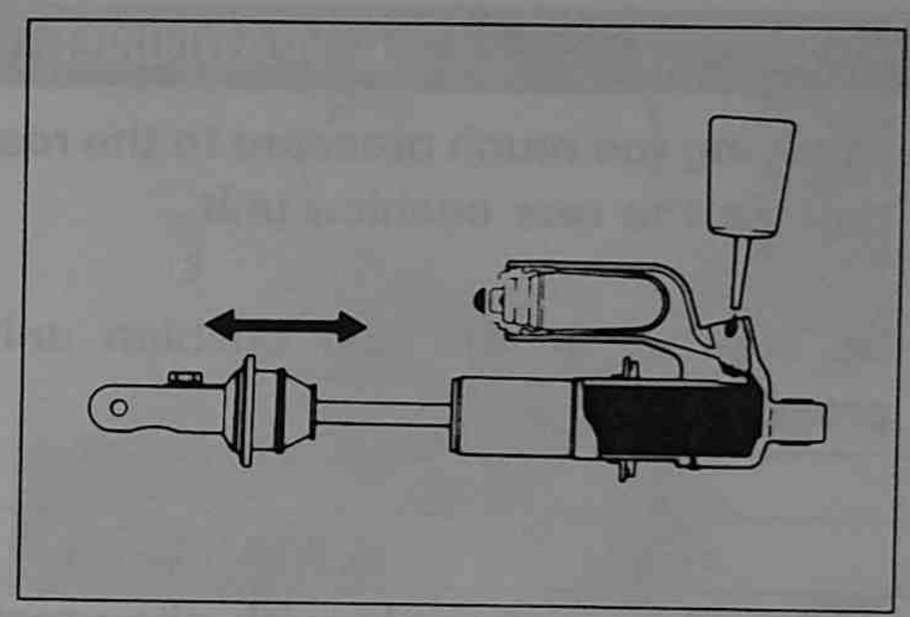

- Tilt the rear cushion unit as shown and pour the fresh rear suspension oil into the reservoir tank.

Oil type: SUZUKI REAR SUSPENSION OIL SS-25 or equivalent rear suspension oil.

Oil capacity: 290 ml (9.8/10.2 US/Imp oz)

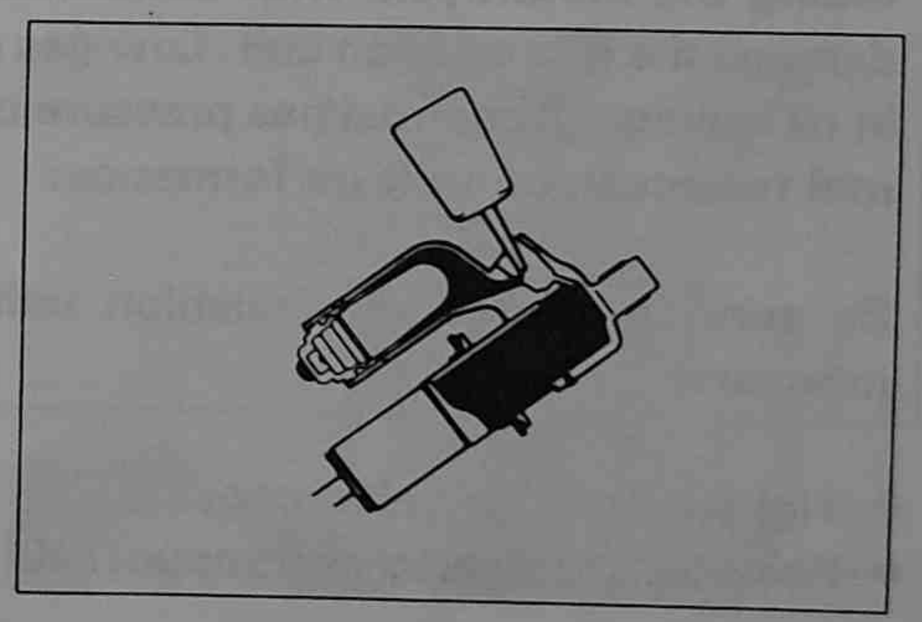

- Reassemble the compression adjuster assembly.

Compression adjuster assembly: 18 N·m (1.8 kg-m, 13.0 lb-ft)

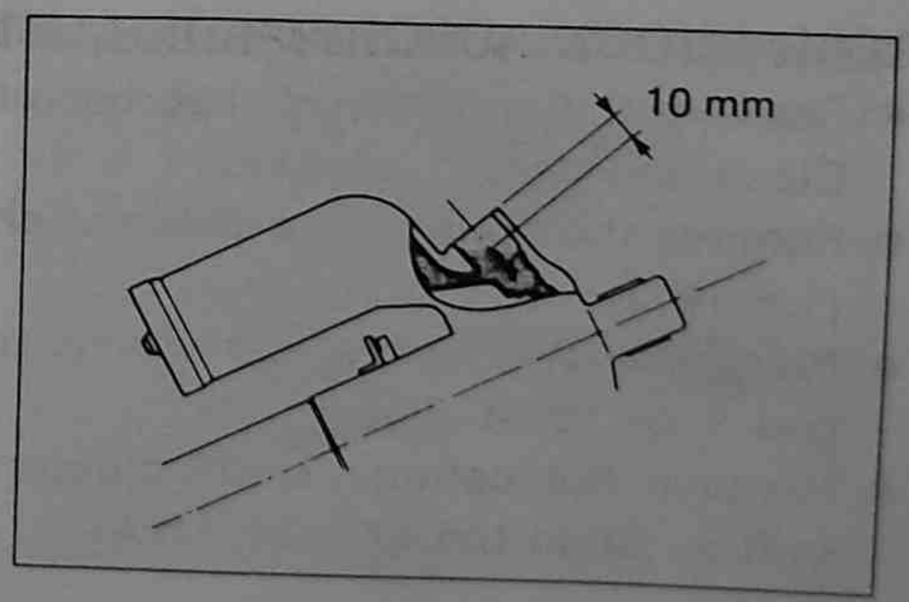

- Vise the rear cushion unit as shown and loosen the air bleed screw.
- Temporarily charge the reservoir with 50 kPa (0.5 kg/cm², 7 psi) of air slowly to inflate the bladder inside.
- Bleed out air in the oil.
- Tighten the air bleed screw.

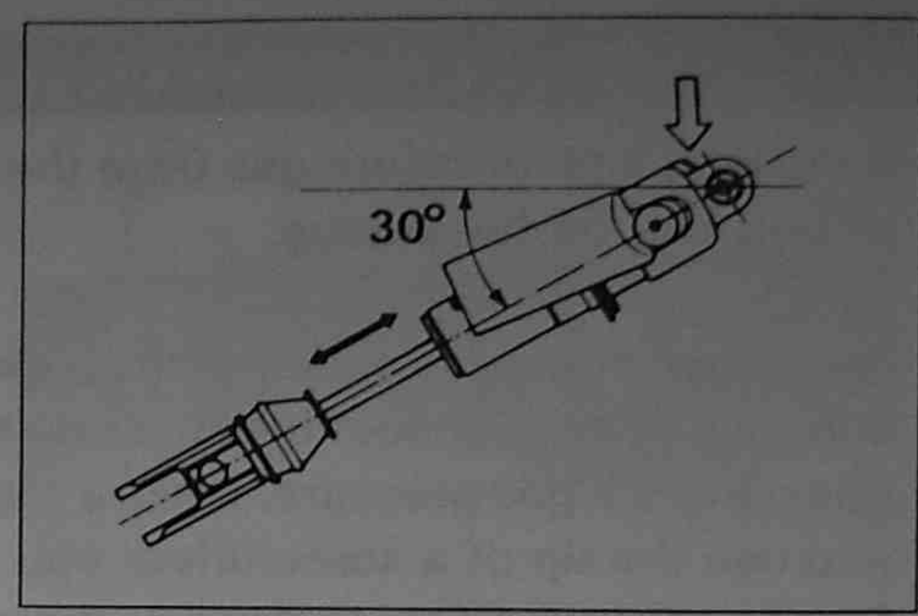

Air bleed screw: 13 N·m (1.3 kg-m, 9.5 lb-ft)

- Fill the rear cushion unit with nitrogen gas to **1000–1200 kPa (10–12 kg/cm², 142–171 psi).**

⚠ WARNING

Use of flammable gas for pressuring the rear cushion unit can be hazardous. Flammable gas such as gas welding oxygen can create a fire hazard.

Use nitrogen gas. If nitrogen gas is not available, compressed air free from water can be substituted.

⚠ WARNING

Applying too much pressure to the rear cushion unit may rupture the rear cushion unit.

Be sure to fill the rear cushion unit to the specified pressure.

⚠ CAUTION

Riding the motorcycle with abnormal gas pressure can damage the rear cushion unit. Low gas pressure can result in oil leakage. Abnormal gas pressure cannot provide normal rear cushion unit performance.

Be sure to fill the rear cushion unit to the specified pressure.

- Tighten the gas valve cap.
- Reinstall the spring and mount the shock absorber.

REAR SHOCK ABSORBER DISASSEMBLY

- Remove the rear shock absorber unit from the frame. Clean and dry it. (☞ 16-2)
- Remove the spring from the rear shock absorber. (☞ 16-2)
- Press the valve with a screwdriver to bleed out nitrogen gas. (☞ 16-4)
- Remove the compression adjuster assembly and the orifice. Drain the oil. (☞ 16-4)

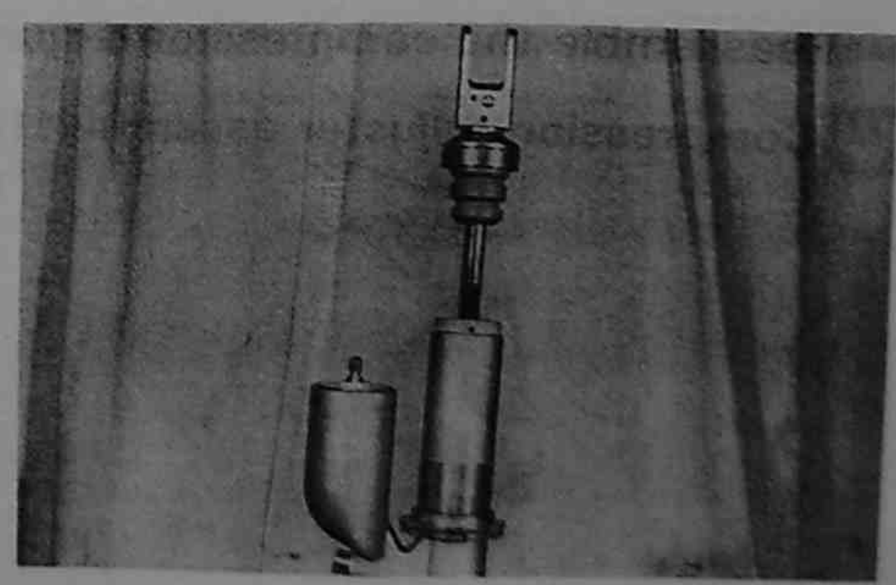

- Vise the rear shock absorber unit in inverted position.
- Depress the bump rubber fully to protect the damper rod from the tool.

NOTE: Be sure to protect the rear shock absorber unit with a rag when using a vise.

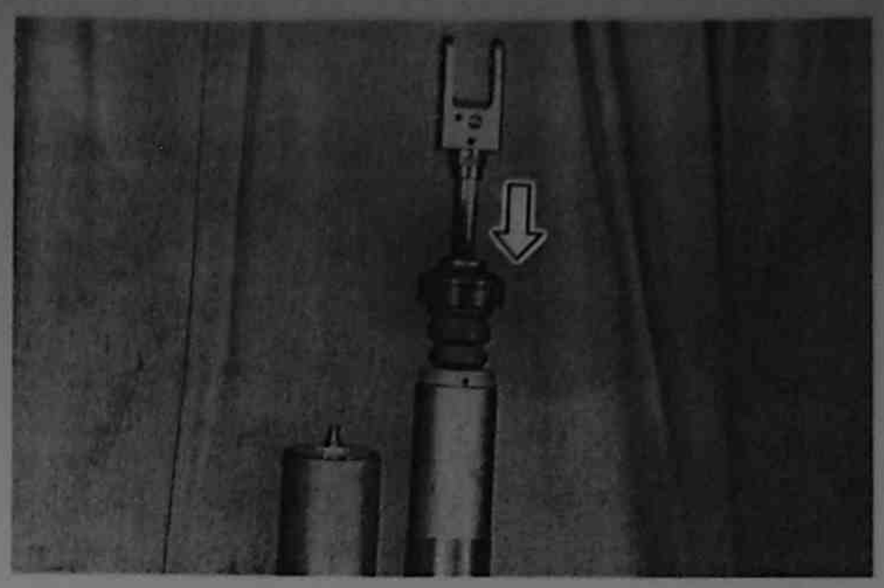

- Evenly hammer the stopper ① with the screwdriver or equivalent and remove it from the rear shock absorber body.

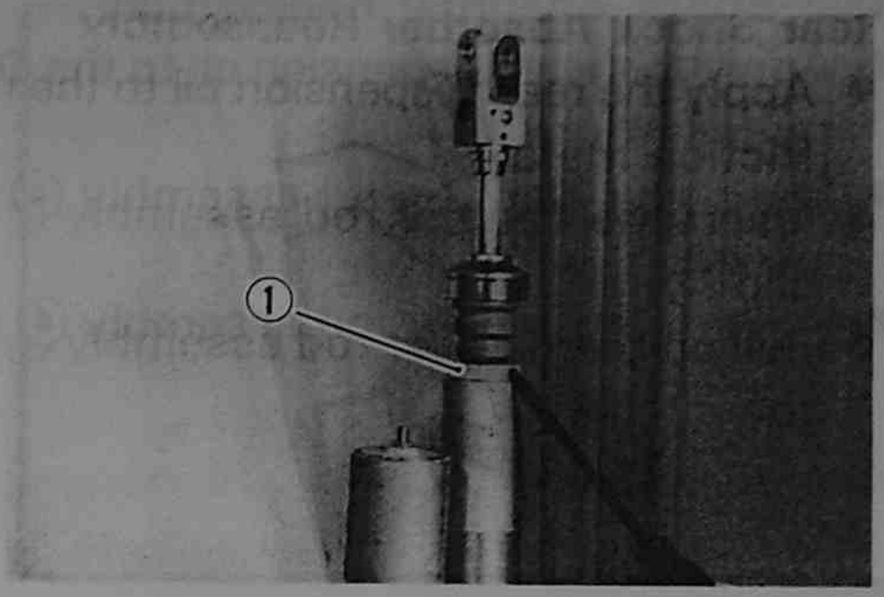

- Depress the seal case ② with the screwdriver until the circlip ③ is fully exposed.

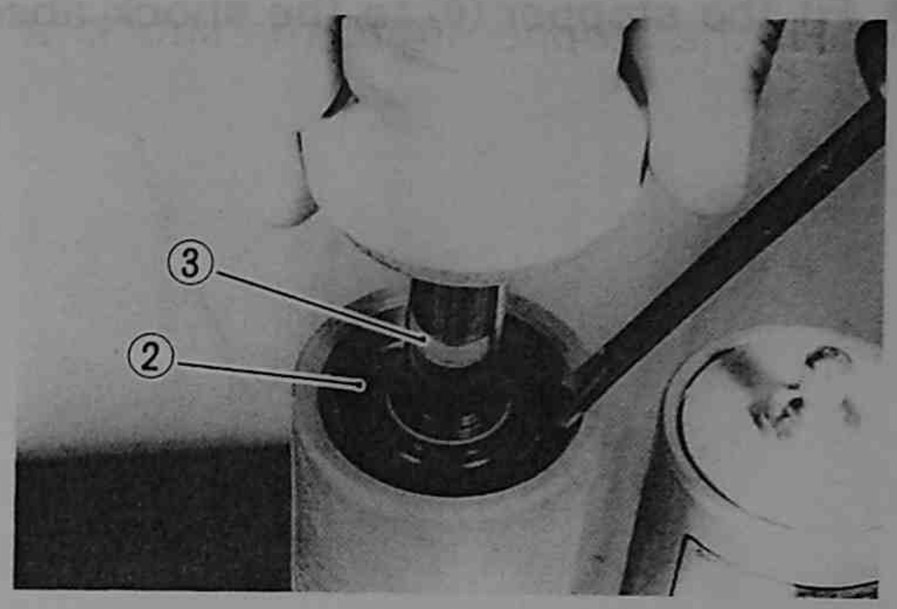

- Remove the circlip ③.

NOTE: Avoid scratching the inner surface of the shock absorber body to avoid oil leaks.

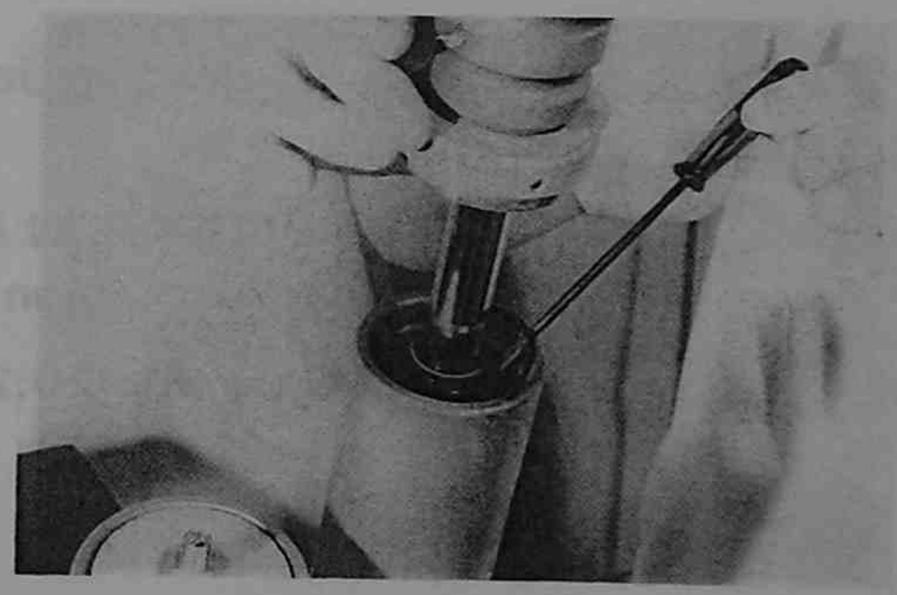

- Extract the damper rod assembly from the shock absorber body.
- Inspect the oil seal and O-rings.
- Inspect the damper rod for bends and scratches.
- Inspect the inner surface of the body.
- Inspect the ''Anti-friction metal'' on the piston.

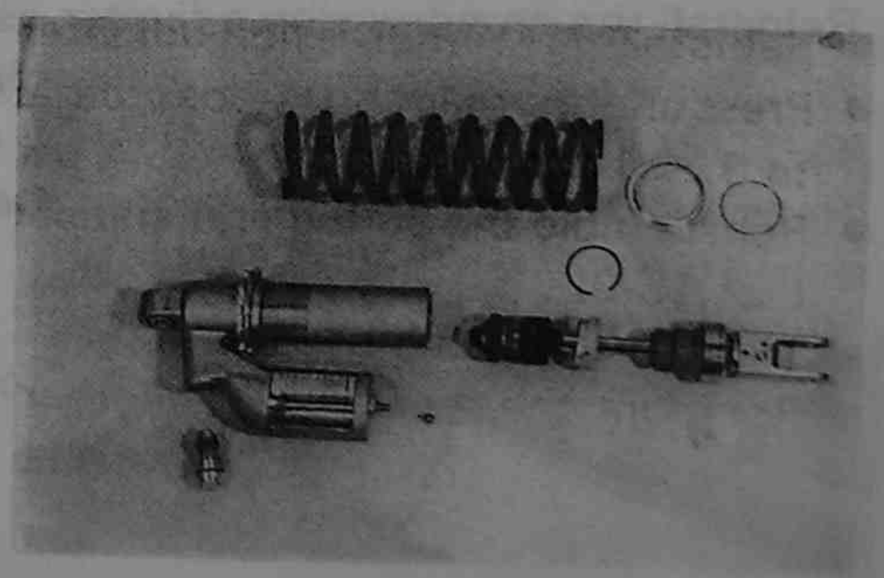

- Replace O-rings ①, ② and ③ with new ones.

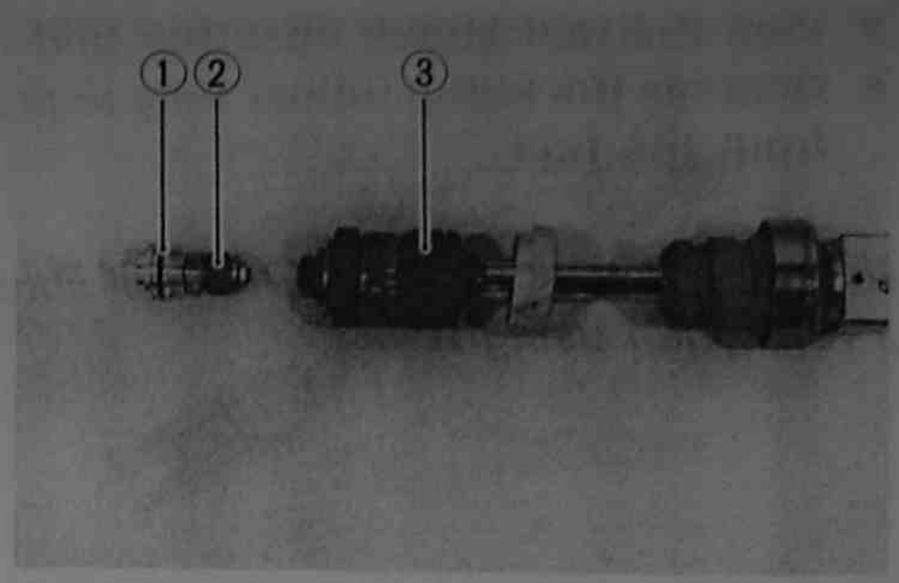

Rear Shock Absorber Reassembly

- Apply the rear suspension oil to the O-rings and the "Anti-friction metal".
- Insert the damper rod assembly ④ and fit the new circlip ⑤.
- Pull up the damper rod assembly ④ until it is stopped by the circlip ⑤.

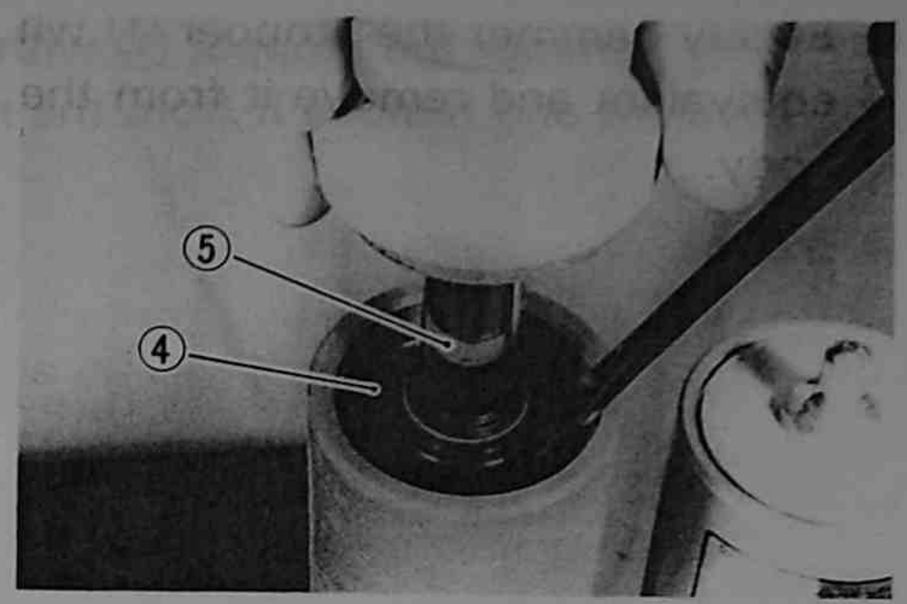

- Fit the stopper ⑥ to the shock absorber body.

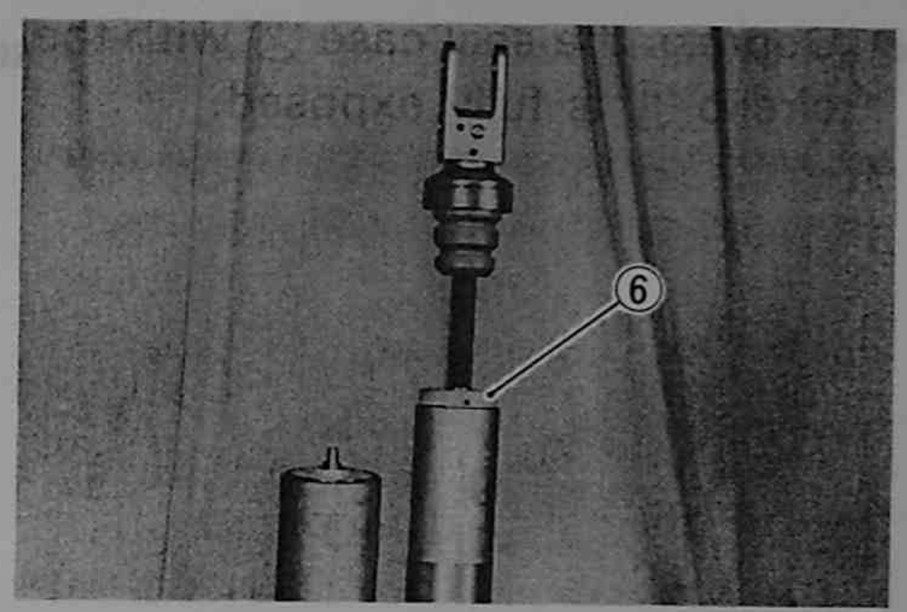

- Fill the specified rear suspension oil in the rear shock absorber. (☞ 16-5)

Oil type: SUZUKI REAR SUSPENSION OIL SS-25 or equivalent rear suspension oil

Oil capacity: Approx. 290 ml (9.8/10.2 US/Imp oz)

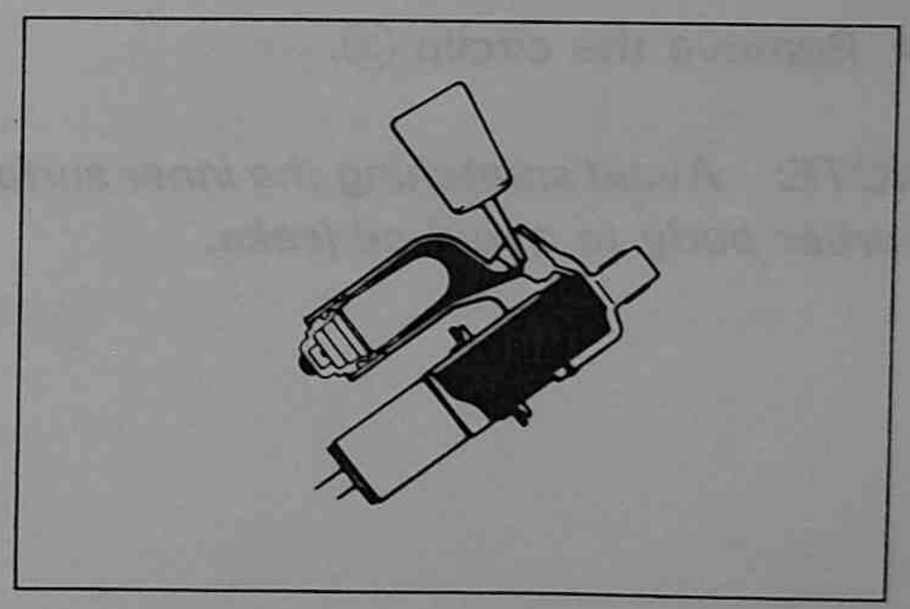

- Reinstall the compression adjuster assembly. (☞ 16-5)
- Pressure the rear shock absorber unit with nitrogen gas to 1200 kPa (12 kg/cm², 174 psi). (☞ 16-5)
- Reassemble the spring and adjust the spring set length. (☞ 16-3)
- Tighten the valve cap.
- Remount the rear shock absorber to the frame.

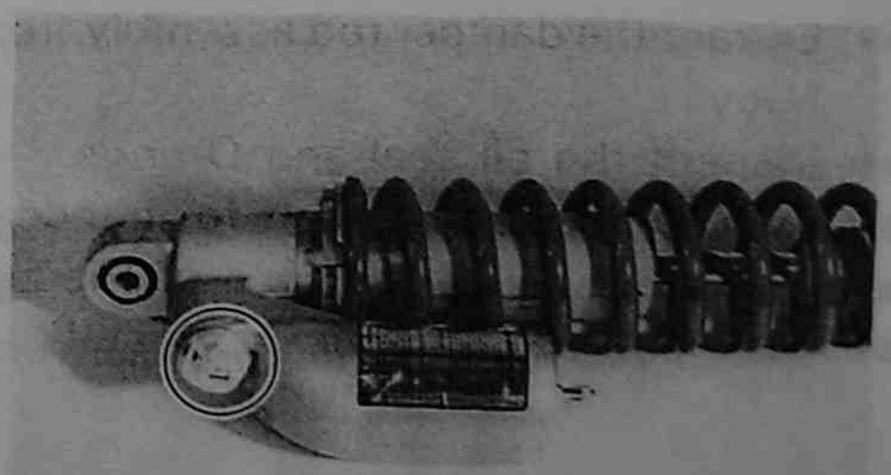

Rear Shock Absorber Disposal

High pressure nitrogen gas is sealed in the rear shock absorber unit. Be sure to release gas before disposing the rear shock absorber unit.

- Remove the valve cap.
- Press the valve with a screwdriver.

⚠ WARNING

Releasing high pressure gas from the rear shock absorber unit can be hazardous.

Place a rag over the valve and push the valve with a screwdriver to release nitrogen gas. Do not use your finger to push the valve, and direct the valve away from your face and body.

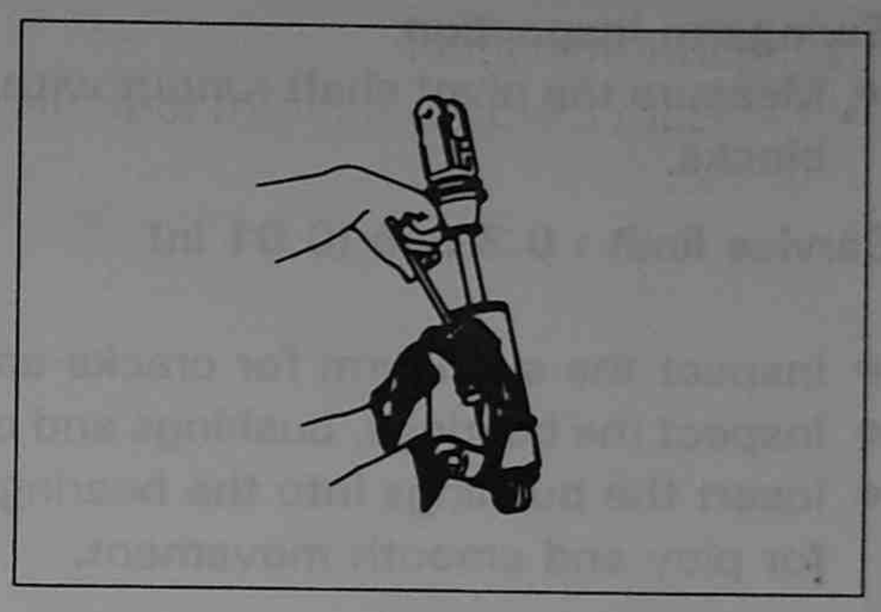

SWINGARM

Swingarm Removal

- Remove the rear wheel. (☞ 13-2)
- Remove the brake pedal. (☞ 14-11)
- Remove the rear brake hose from the guides.
- Remove the rear caliper. (☞ 14-6)
- Remove the drive chain.

- Remove the chain guide.

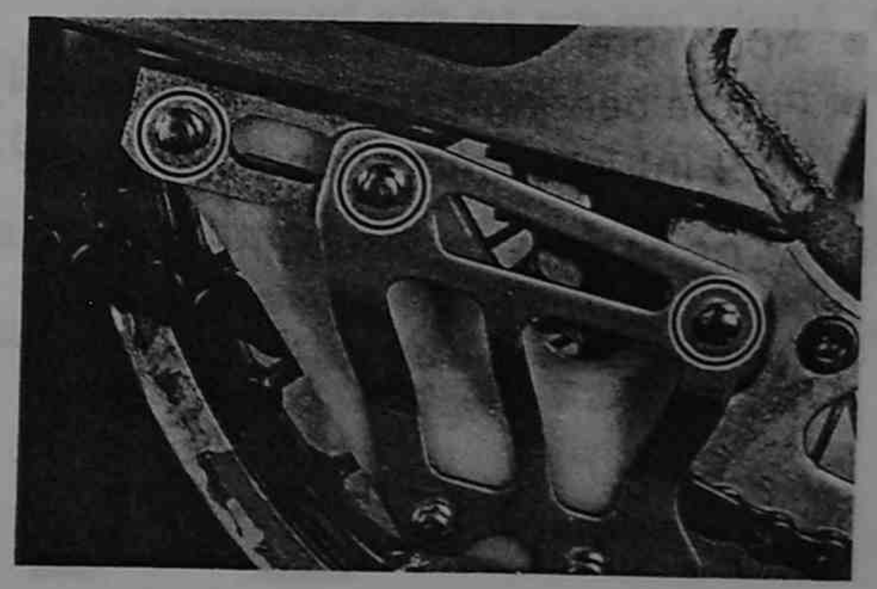

- Remove the rear cushion rod bolt.
- Remove the swingarm pivot bolt.
- Remove the swingarm.

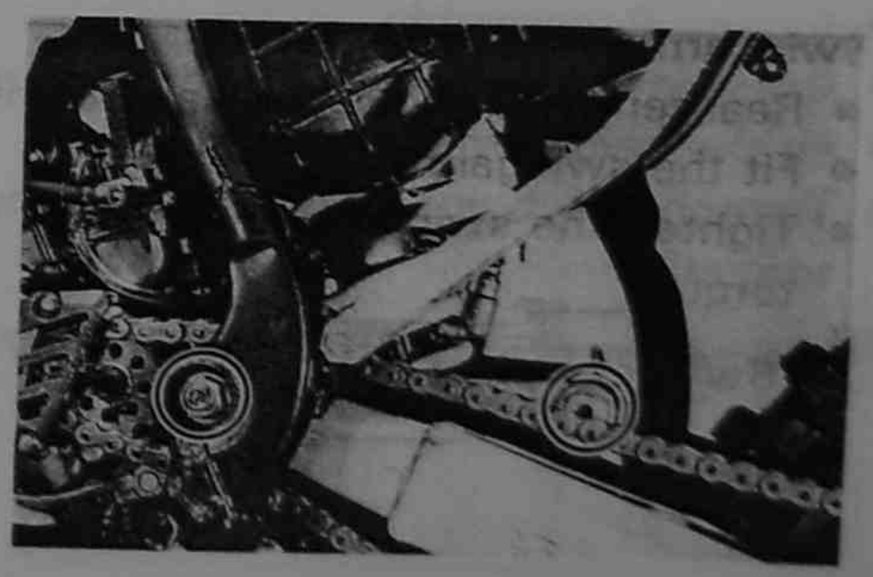

- Remove the covers and bushings.

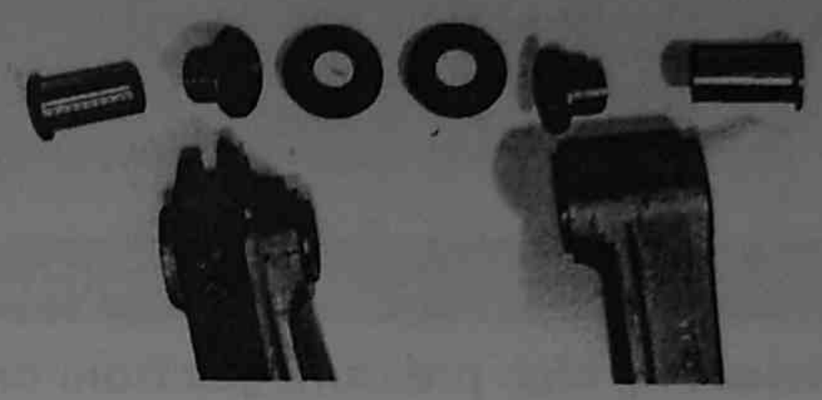

Swingarm Inspection

- Measure the pivot shaft runout with a dial gauge and V-blocks.

Service limit : 0.3 mm (0.01 in)

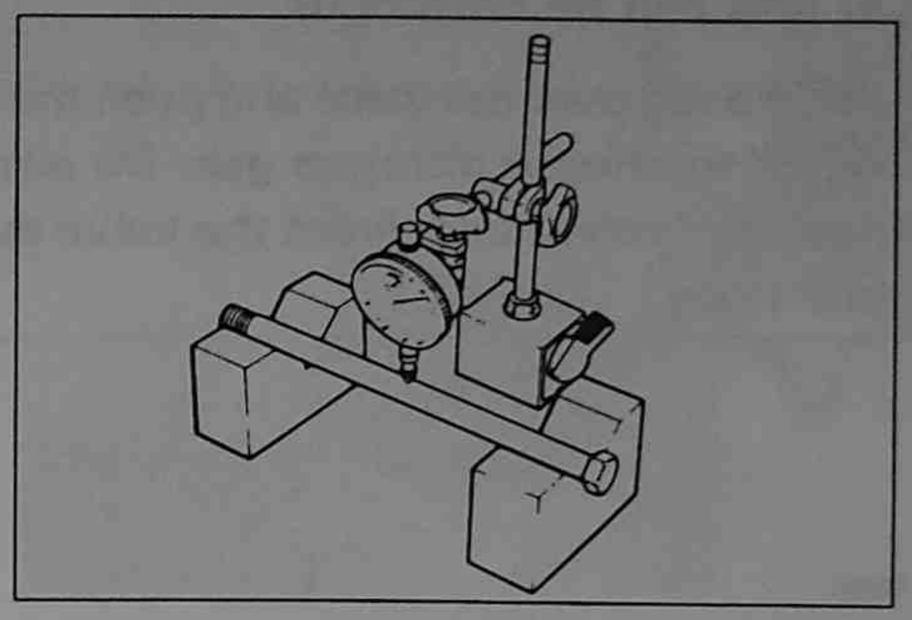

- Inspect the swingarm for cracks and damage.
- Inspect the bearings, bushings and oil seals for damage.
- Insert the bushings into the bearings and inspect them for play and smooth movement.

Bearing Replacement

- Remove the bearings and oil seals with the special tools.

TOOL 09923-74510: Bearing puller
09930-30102: Rotor remover slide shaft

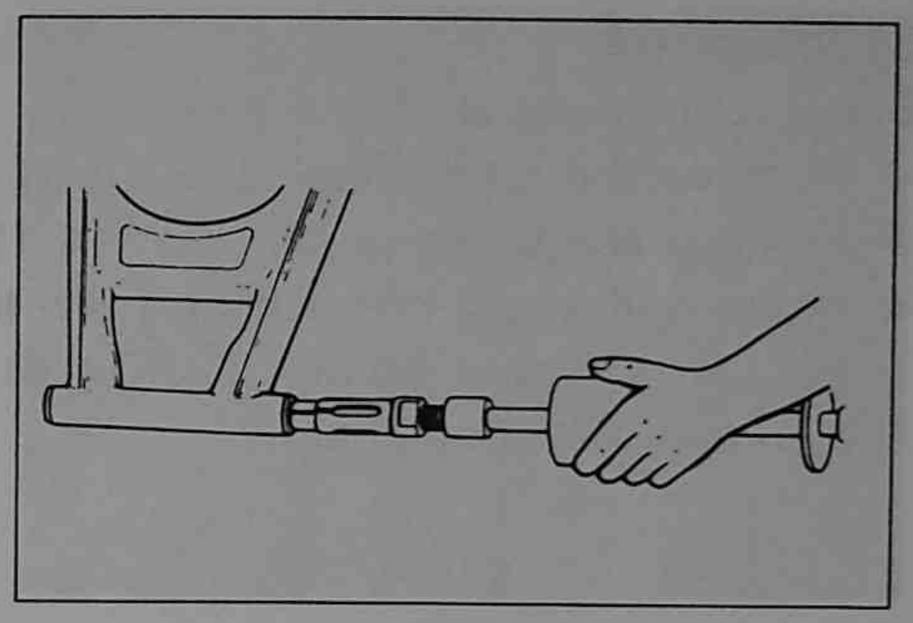

- Apply grease to the bearings.
- Fit the bearings with the special tool and a pipe, 24 mm (0.9 in) in diameter and 7.5 mm (0.3 in) in length.

TOOL 09941-34513: Bearing installer set

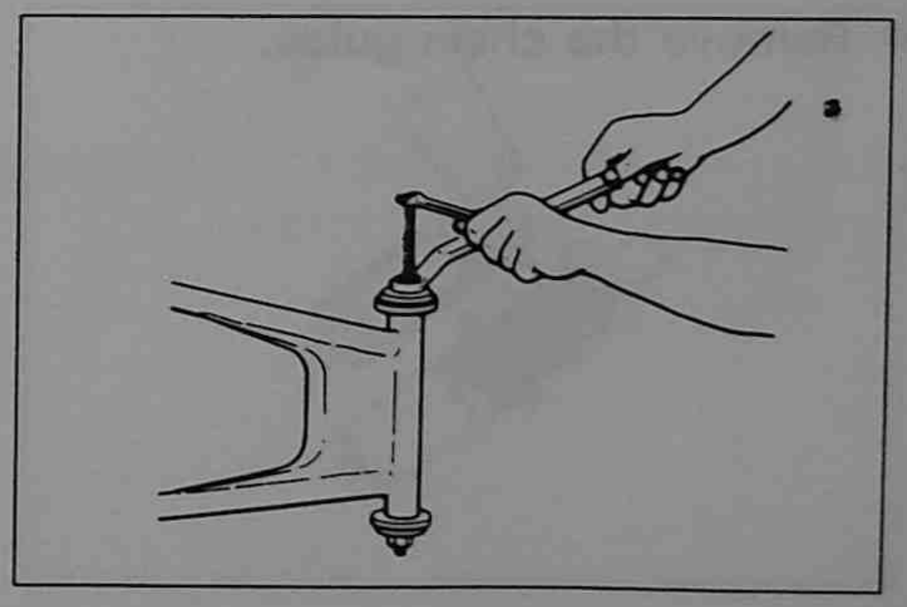

- Fit the oil seals with the special tool and the spacer.

Swingarm Reassembly

- Reassemble the bushings and covers.
- Fit the swingarm to the frame.
- Tighten the swingarm pivot shaft nut to the specified torque.

Swingarm pivot shaft nut: 70 N·m (7.0 kg-m, 50.5 lb-ft)

- Tighten the rear cushion rod nut to the specified torque.

Rear cushion rod nut: 100 N·m (10.0 kg-m, 72.5 lb-ft)

- Reassemble the chain guide.
- Reassemble the rear caliper. (☞ 14-7)
- Fit the rear brake hose guides.
- Reassemble the brake pedal. (☞ 14-11)
- Reassemble the rear wheel. (☞ 13-2)

REAR SUSPENSION LINKAGE

Rear Suspension Linkage Removal

- Remove the swingarm. (☞ 16-6)
- Remove the swingarm linkage bolts.

Rear Suspension Linkage Inspection

- Inspect the cushion lever rod and cushion.
- Inspect the spacers for damage.
- Inspect the bearings for damage.
- Insert the spacers into the bearings and inspect them for smooth movement.

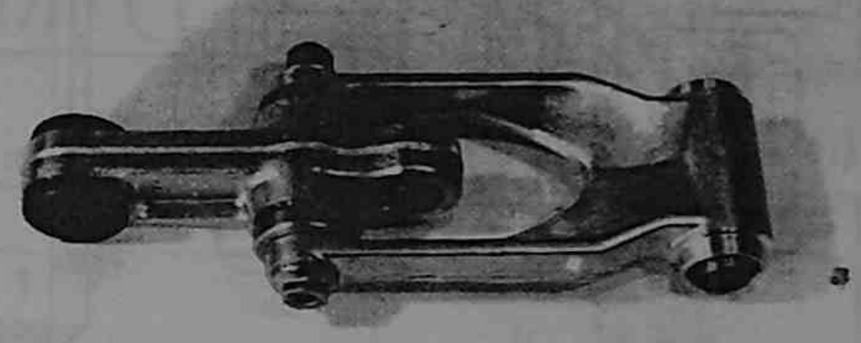

Cushion Lever Bearing Replacement

- Remove the circlips.
- Remove the bearings with the special tools.

TOOL 09923-74510: Bearing puller
09930-30102: Rotor remover slide shaft

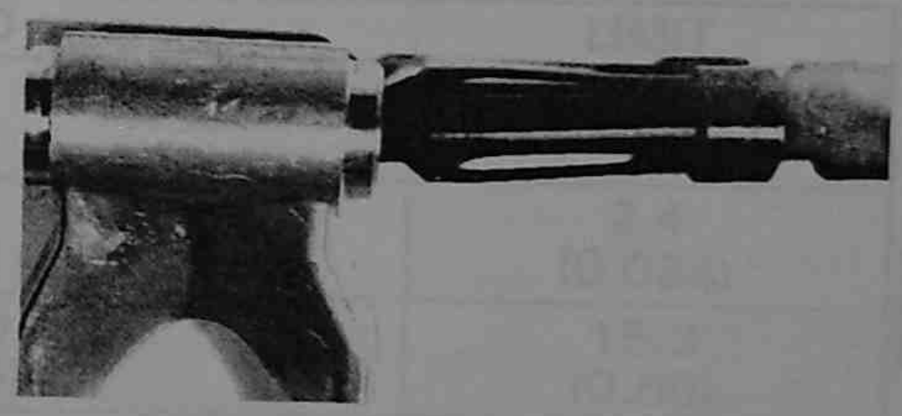

- Apply grease to the bearings.
- Fit the bearings with the special tool and a pipe, 28 mm (1.1 in) in diameter and 4 mm (0.2 in) in length.

TOOL 09941-34513: Bearing installer set

- Fit the circlips.

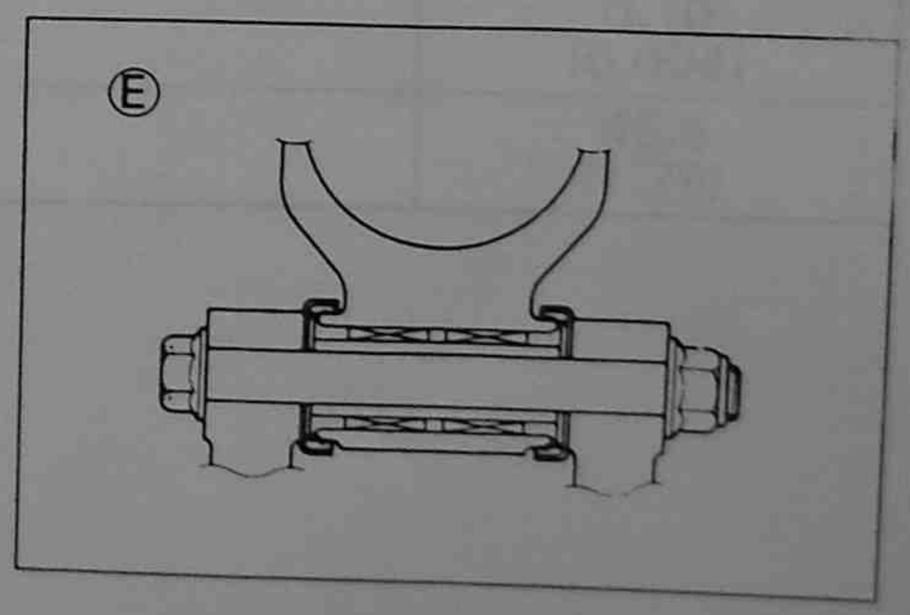

Rear Suspension Linkage Reassembling

- Reassemble the rear suspension linkage.
- Tighten the nuts to the specified torque.

Tightening torque:

A: 60 N·m (6.0 kg-m, 43.5 lb-ft)
B: 60 N·m (6.0 kg-m, 43.5 lb-ft)
C: 100 N·m (10.0 kg-m, 72.5 lb-ft)
D: 80 N·m (8.0 kg-m, 58.0 lb-ft)
E: 100 N·m (10.0 kg-m, 72.5 lb-ft)
F: 70 N·m (7.0 kg-m, 50.5 lb-ft)

- Reassemble the swingarm. (☞ 16-8)

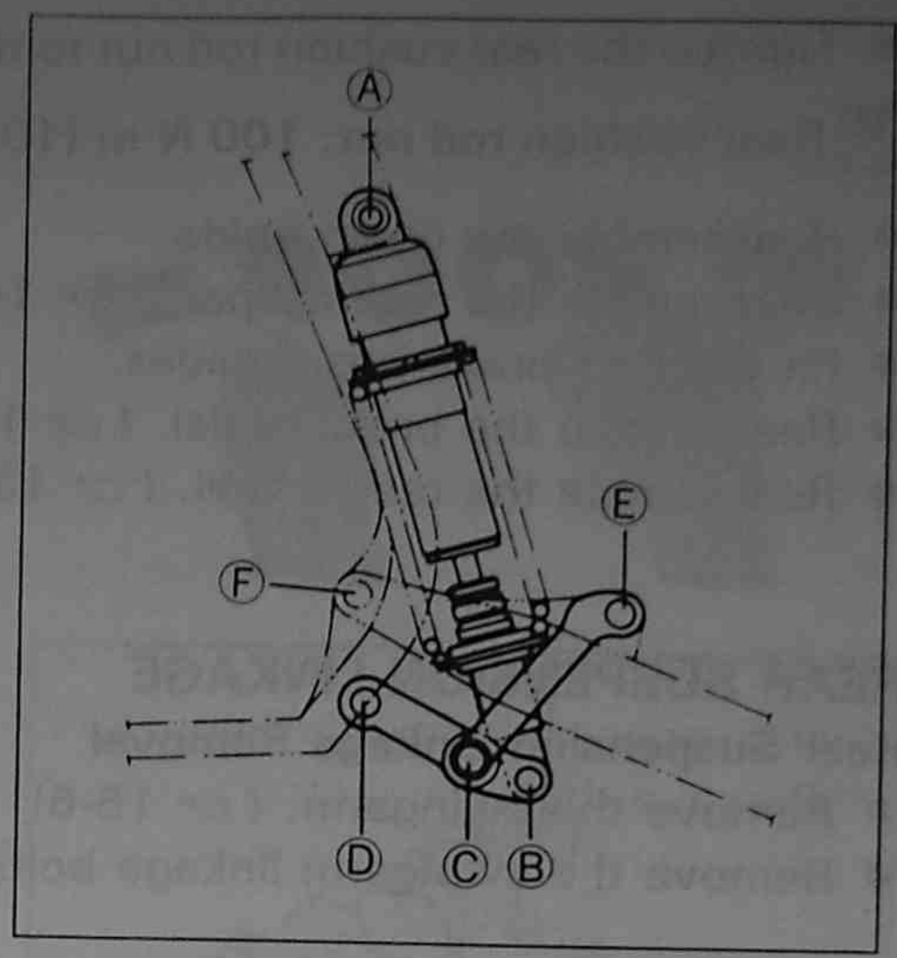

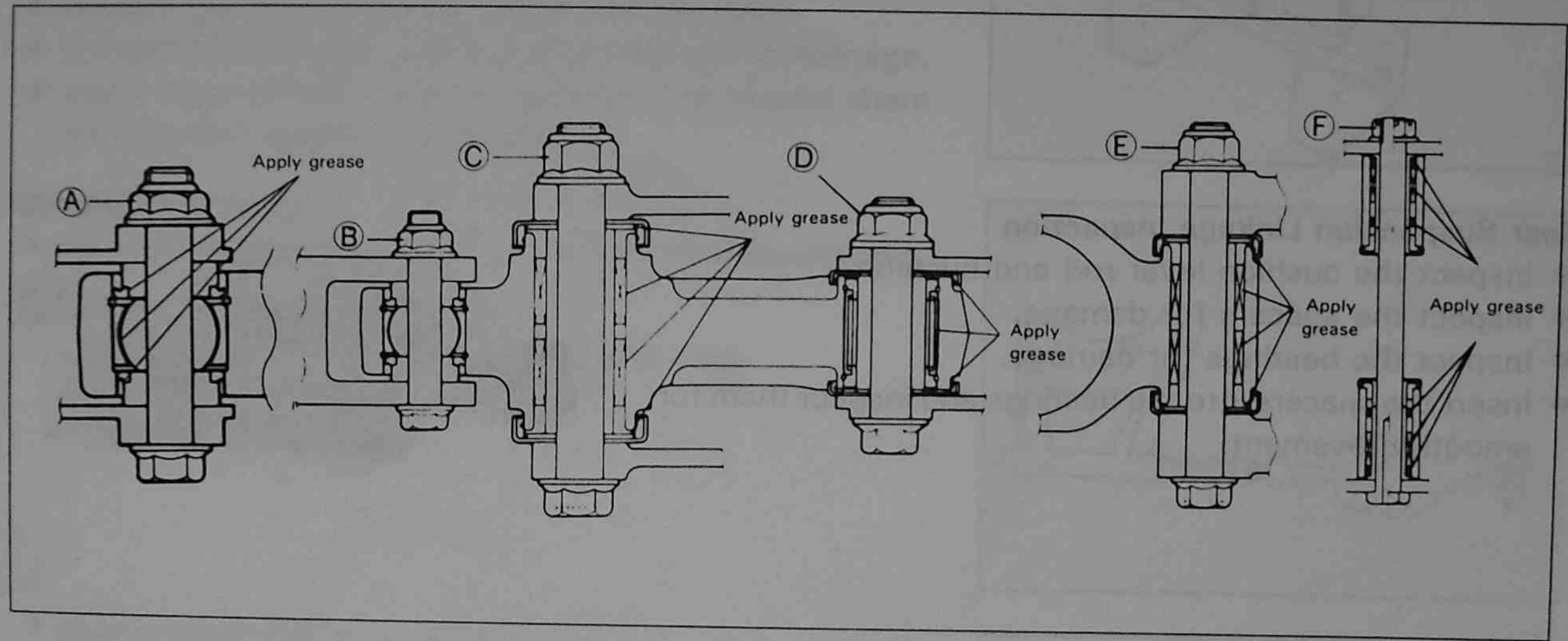

SERVICE DATA

CYLINDER + PISTON + PISTON RING

Unit: mm (in)

ITEM	STANDARD	LIMIT
Piston to cylinder clearance	0.050–0.080 (0.0020–0.0031)	0.120 (0.0047)
Cylinder bore	67.000–67.015 (2.6377–2.6384) Measure 20 (0.8) from the top surface	——
Piston diam.	66.950–66.965 (2.6358–2.6364) Measure 24 (0.9) from the skirt end	66.880 (2.6331)
Cylinder distortion	——	0.05 (0.002)
Cylinder head distortion	——	0.05 (0.002)
Piston ring end gap	0.20–0.40 (0.008–0.016)	0.85 (0.033)
Piston ring to groove clearance	0.020–0.060 (0.0008–0.0024)	——
Piston pin bore	18.000–18.006 (0.7087–0.7089)	18.030 (0.7098)
Piston pin O.D.	17.995–18.000 (0.7085–0.7087)	17.980 (0.7079)

CONROD + CRANKSHAFT

Unit: mm (in)

ITEM	STANDARD	LIMIT
Conrod small end I.D.	23.003–23.011 (0.9056–0.9059)	23.040 (0.9071)
Crank web to web width	58.0±0.1 (2.283±0.004)	——
Crankshaft runout	——	0.05 (0.002)

CLUTCH

Unit: mm (in)

ITEM	STANDARD	LIMIT
Clutch cable play	10–15 (0.4–0.6)	——
Drive plate thickness	2.7–2.9 (0.106–0.114)	2.4 (0.094)
Drive plate claw width	15.8–16.0 (0.62–0.63)	15.3 (0.60)
Driven plate distortion	——	0.10 (0.004)
Clutch spring free length	——	45.5 (1.79)

RADIATOR

ITEM	STANDARD	LIMIT
Radiator cap valve release pressure	110 kPa (1.1 kg/cm², 16 psi)	——

TRANSMISSION

Unit: mm (in) Except ratio

ITEM		STANDARD	LIMIT
Primary reduction ratio		2.652 (61/23)	——
Final reduction ratio		3.846 (50/13)	——
Gear ratios	Low	2.285 (32/14)	——
	2nd	1.733 (26/15)	——
	3rd	1.375 (22/16)	——
	4th	1.090 (24/22)	——
	Top	0.863 (19/22)	——
Shift fork to groove clearance		0.1–0.3 (0.004–0.012)	0.5 (0.02)
Shift fork groove width		4.8–4.9 (0.189–0.193)	——
Shift fork thickness		4.6–4.7 (0.181–0.185)	——

DRIVE CHAIN

ITEM	STANDARD		LIMIT
Drive chain	Type	RK520SMO	——
	Links	114	——
	20-pitch length	——	319.4 (12.57)
Drive chain slack		55–65 (2.2–2.6)	——

CARBURETOR

ITEM	SPECIFICATION
Carburetor type	KEIHIN PJ38
Bore size	38 mm
I.D. No.	29E6 (29E2 ... for Canada)
Idle r/min	1150–1250
Float height	16.0±1.0 mm (0.63±0.04 in)
Main jet (M.J.)	#180 (#165 ... for Canada)
Main air jet (M.A.J.)	#200
Jet needle (J.N.)	R1472M1L-3rd
Cut-away (C.A.)	#5
Slow jet (S.J.)	#60
By-pass (B.P.)	0.8 mm (0.031 in)
Pilot outlet (P.O.)	0.7 mm (0.028 in)
Air screw (A.S.)	1 turn out
Throttle cable play	2.0–4.0 mm (0.08–0.16 in) at the throttle grip

ELECTRICAL

Unit: mm (in)

ITEM	SPECIFICATION		NOTE
Ignition timing	7.5° ± 1° B.T.D.C. at 9 000 r/min.		
Spark plug	Type	NGK: BR9EV	
	Gap	0.5–0.6 (0.020–0.024)	
Spark performance	Over 8 (0.3) at 1 atm.		
Ignition coil resistance	Primary	0–1 Ω	Terminal–Ground
	Secondary	5–8 kΩ	Plug cap–Ground
Magneto coil resistance	Lighting	0–1 Ω	Gr–B/W
	Primary	90–130 Ω	B/R–R/W
	Pulser	80–120 Ω	R–G
Regulated voltage	11.0–13.0 V at 5 000 r/min.		

BRAKE + WHEEL

Unit: mm (in)

ITEM	STANDARD		LIMIT
Brake lever play	0.1–0.3 (0.004–0.01)		——
Rear brake pedal height	5 (0.2)		——
Brake disk thickness	Front	3.0±0.2 (0.118±0.008)	2.5 (0.10)
	Rear	4.5±0.2 (0.177±0.008)	4.0 (0.16)
Brake disk runout	Front&Rear	——	0.30 (0.01)
Master cylinder bore	Front	11.000–11.043 (0.4331–0.4348)	——
	Rear	14.000–14.043 (0.5512–0.5529)	——
Master cylinder piston diam.	Front	10.957–10.984 (0.4314–0.4324)	——
	Rear	13.957–13.984 (0.5495–0.5506)	——
Brake caliper cylinder bore	Front	27.000–27.050 (1.0630–1.0650)	——
	Rear	30.230–30.280 (1.1902–1.1921)	——
Brake caliper piston diam.	Front	26.900–26.950 (1.0591–1.0610)	——
	Rear	30.160–30.180 (1.1874–1.1882)	——
Wheel rim runout	Axial	——	2.0 (0.08)
	Radial	——	2.0 (0.08)

ITEM	STANDARD		LIMIT
Wheel axle runout	Front	—	0.25 (0.010)
	Rear	—	0.25 (0.010)
Tire size	Front	80/100—21 51M	—
	Rear	110/100—18 64M	—
Tire tread depth	Front	—	4.0 (0.16)
	Rear	—	4.0 (0.16)

SUSPENSION

Unit: mm (in)

ITEM	STANDARD	LIMIT	NOTE
Front fork stroke	300 (11.8)	—	
Front fork spring free length	—	515.0 (20.3)	
Front fork spring rate	7.85 N/mm (0.80 kgf/mm)	—	
Front fork oil level	120 (4.7)	—	Set the spacer and compress front fork fully.
Front fork air pressure	0 kPa (0 kg/cm², 0 psi)	—	
Rear shock absorber gas pressure	1000 kPa (10 kg/cm², 142 psi)	—	
Rear shock absorber spring rate	53 N/mm (5.4 kgf/mm)	—	
Rear shock absorber spring pre-set length	263.7 (10.4)	—	
Rear wheel travel	324 (12.8)	—	
Swingarm pivot shaft runout	—	0.3 (0.01)	

TIRE PRESSURE

Front & Rear	70—110 kPa 0.7—1.1 kg/cm² 10—16 psi

FUEL + OIL + COOLANT

ITEM		SPECIFICATION	NOTE
Fuel type		Unleaded gasoline minimum 95 octane (RON)	
Fuel tank including reserve		11.0 L (2.9/2.4 US/Imp gal)	
	reserve	1.6 L (0.4/0.35 US/Imp gal)	
Engine oil type		B.P. RACING 2T-R SHELL SPORTS SX MOTUL 800 2T CASTROL A747	
Transmission oil type		SAE 10W/40	
Transmission oil capacity	Change	650 ml (0.7/0.6 US/Imp qt)	
	Overhaul	750 ml (0.8/0.7 US/Imp qt)	
Front fork oil type		SUZUKI fork oil SS-05 or an equivalent fork oil	
Front fork oil capacity (each leg)		628 ml (21.2/22.1 US/Imp oz)	
Coolant type		Use an anti-freeze&summer coolant compatible with aluminum radiator, mixed with distilled water only, at the ratio of 50 : 5 0.	
Coolant capacity		1100 ml (1.2/1.0 US/Imp qt)	
Rear shock absorber oil type		SUZUKI Rear suspension oil SS-25 or an equivalent rear suspension oil	
Rear shock absorber oil capacity		290 ml (9.8/10.2 US/Imp oz)	
Brake fluid type		DOT4	

SPECIAL TOOLS

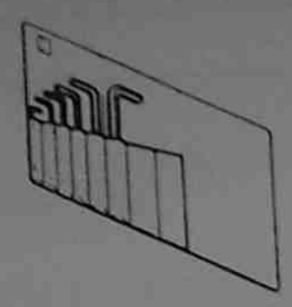 09900-00401 Hexagon wrench set	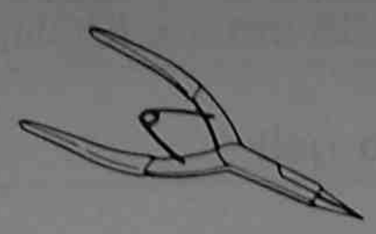 09900-06107 Snap ring pliers	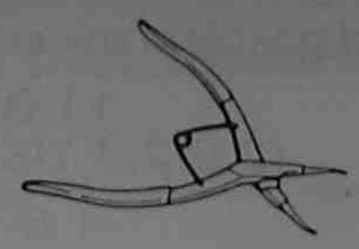 09900-06108 Snap ring pliers	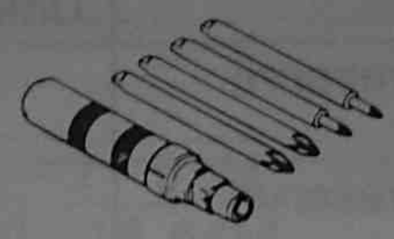 09900-09004 Impact driver set	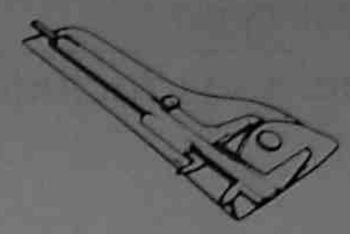 09900-20101 Vernier calipers (150 mm)
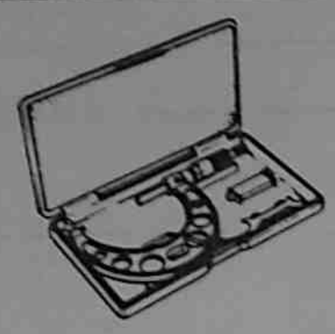 09900-20203 Micrometer (50—75 mm)	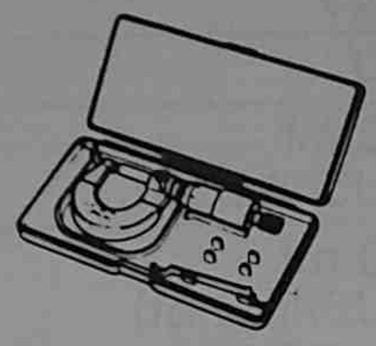 09900-20205 Micrometer (0—25 mm)	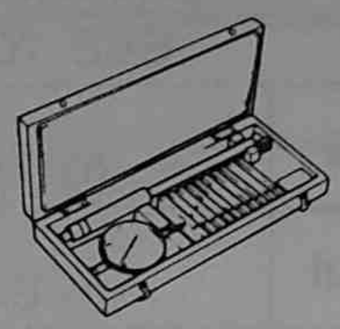 09900-20508 Cylinder gauge set	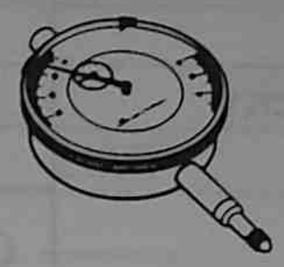 09900-20602 Dial gauge	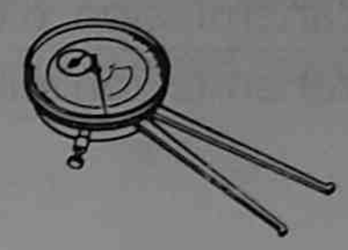 09900-20605 Dial gauge
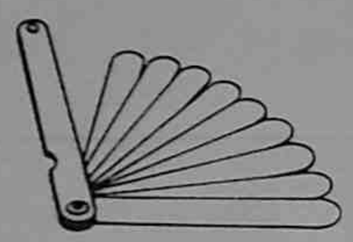 09900-20803 Thickness gauge	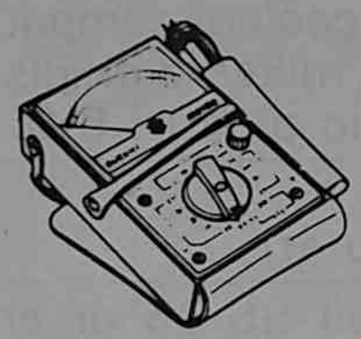 09900-25002 Pocket tester	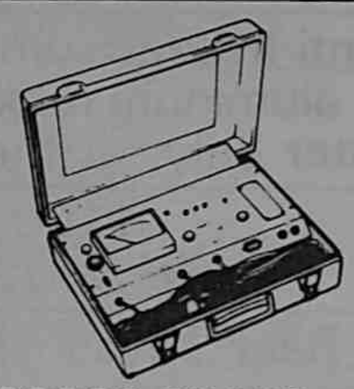 09900-28108 Electro tester	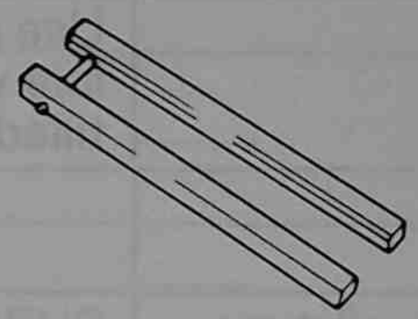 09910-20116 Conrod holder	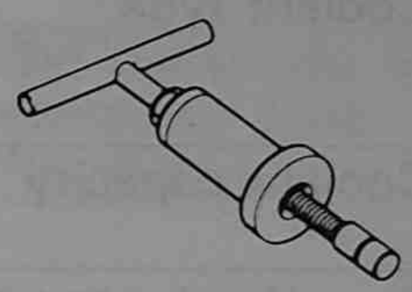 09910-32812 Crankshaft installer
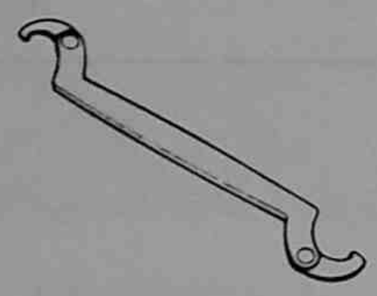 09910-60611 Universal clamp wrench	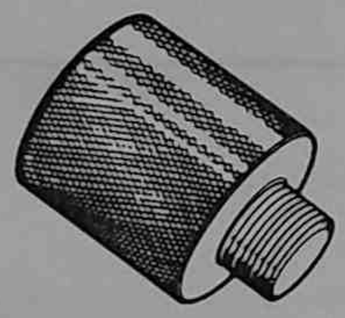 09911-11310 Crankshaft installer attachment	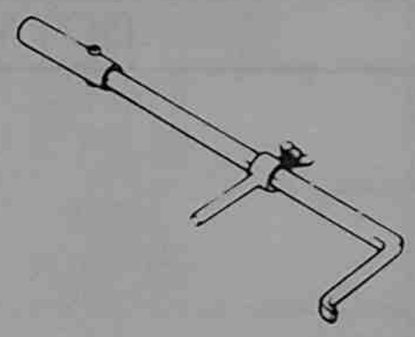 09913-50121 Oil seal remover	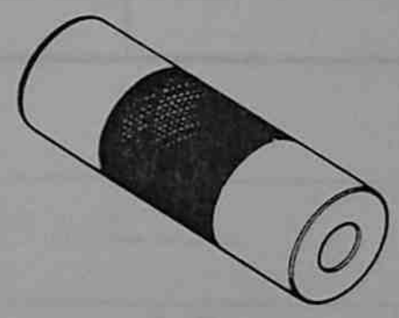 09914-79610 Bearing/Oil seal installer	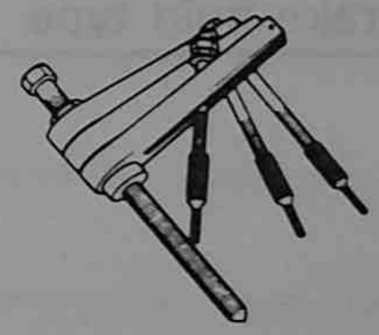 09920-13120 Crankcase separating tool
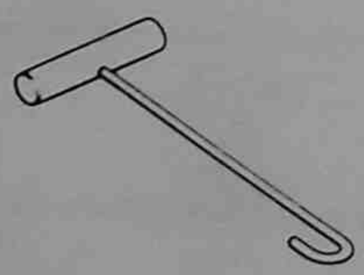 09920-20310 Spring hook	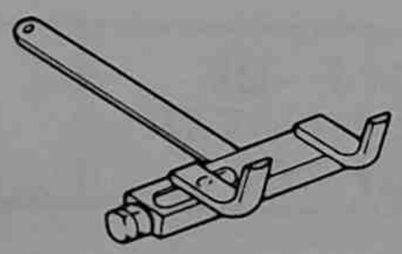 09920-53740 Clutch sleeve hub holder	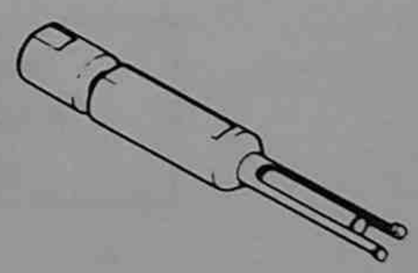 09921-20200 Bearing remover	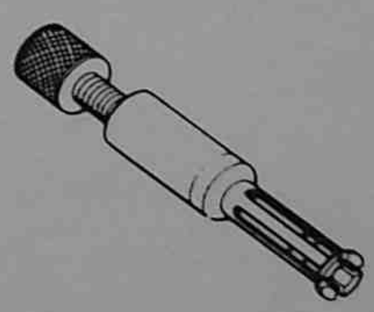 09923-73210 Bearing puller	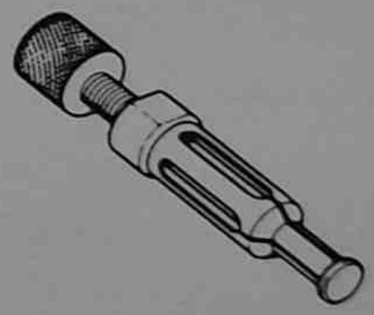 09923-74510 Bearing puller
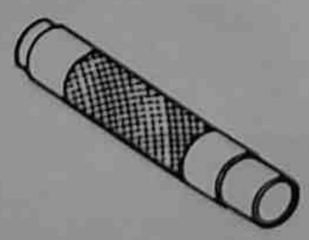 09925-18010 Steering bearing installer	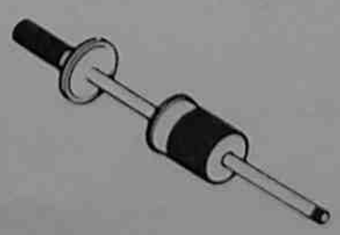 09930-30102 Rotor remover slide shaft	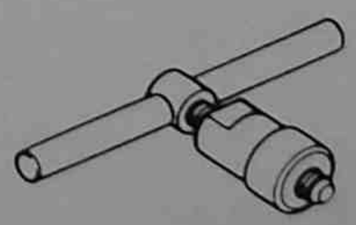 09930-30113 Flywheel rotor remover	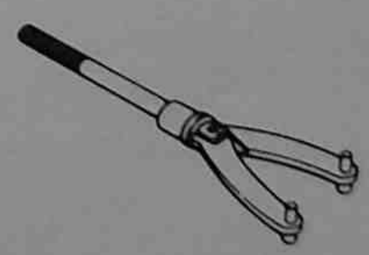 09930-40113 Rotor holder	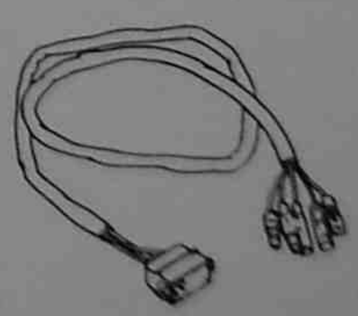 09930-70210 CDI unit test lead

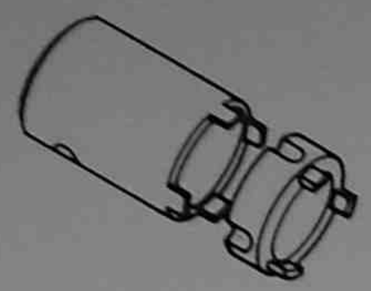 09940-14911 09940-14960 Steering nut socket wrench	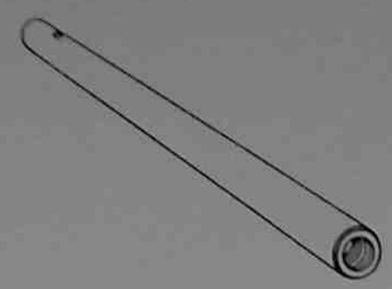 09940-52841 Front fork inner rod holder	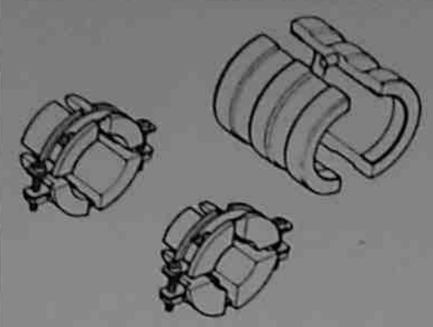 09940-52861 Front fork oil seal installer set	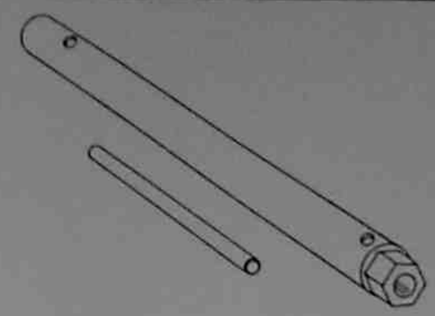 09940-52890 Front fork inner rod holder	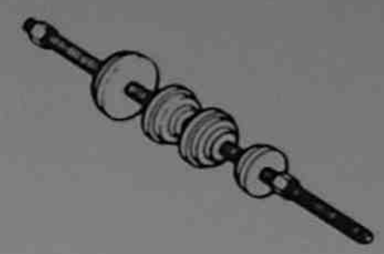 09941-34513 Bearing installer set
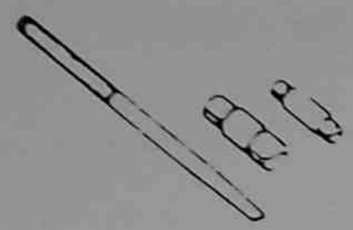 09941-50111 Wheel bearing remover	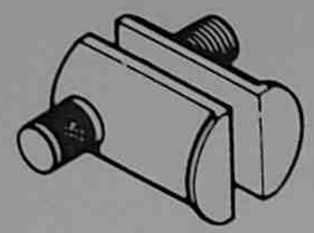 09941-54911 Bearing outer race remover	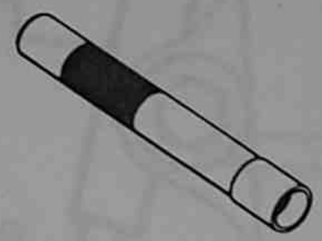 09941-74910 Steering bearing installer	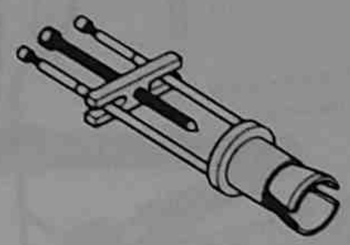 09941-84510 Bearing inner race remover	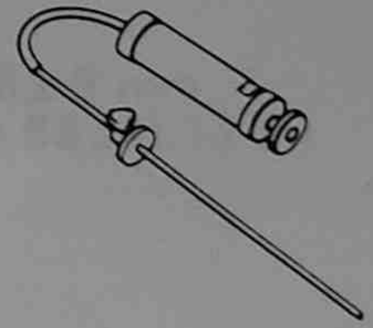 09943-74111 Front fork oil level gauge

WIRE, CABLE AND HOSE ROUTING

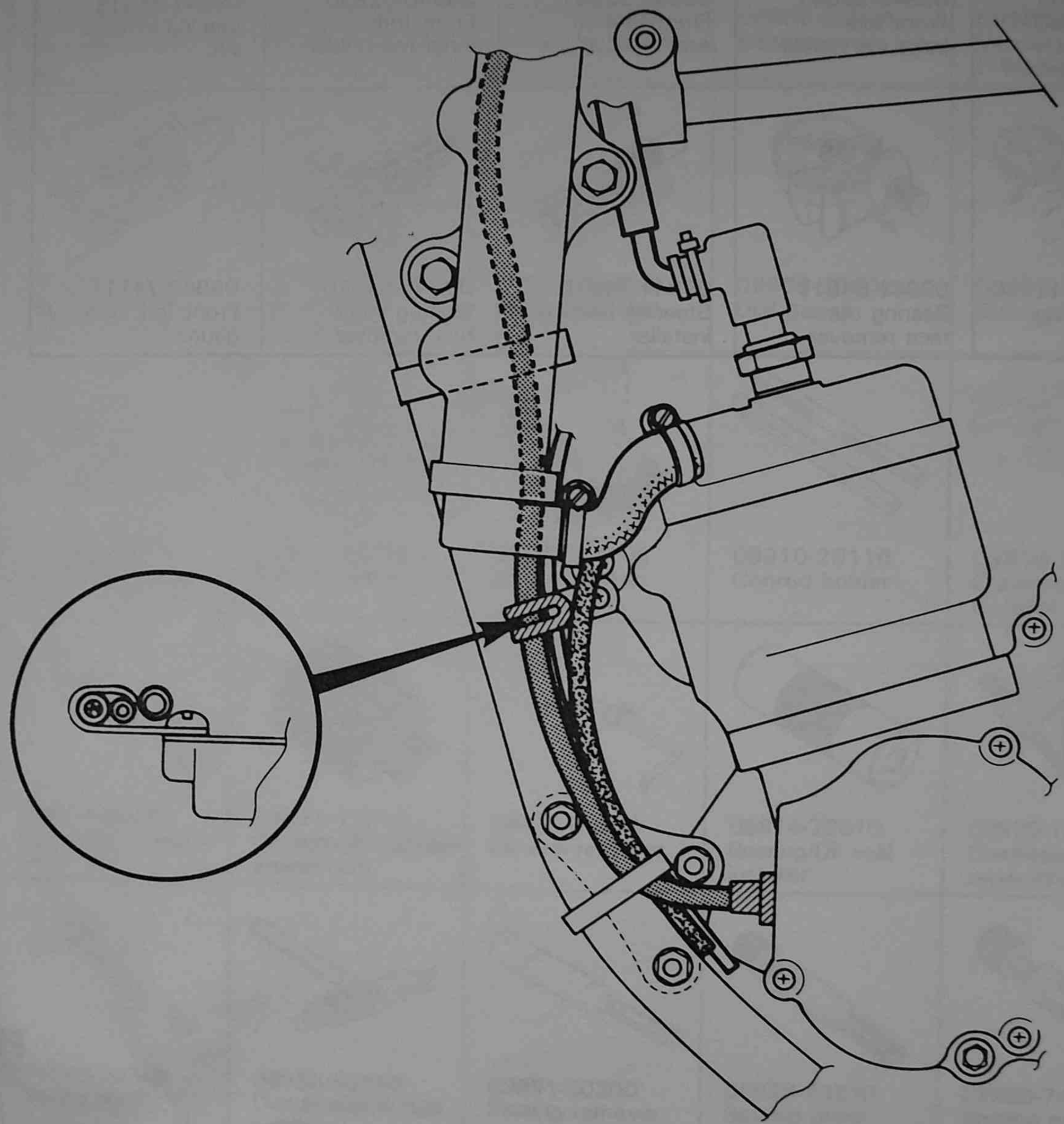

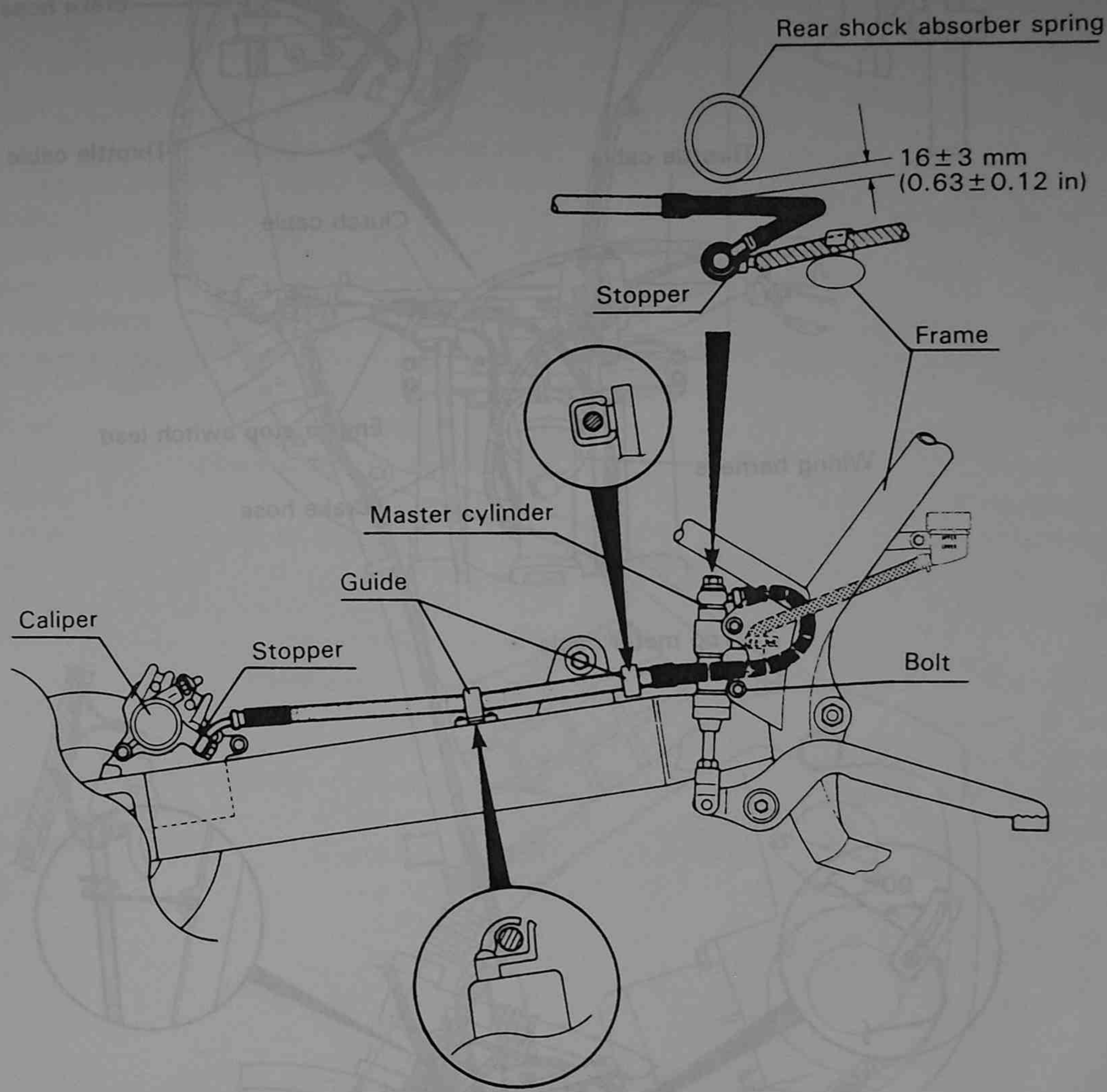
Rear shock absorber spring
16 ± 3 mm
(0.63 ± 0.12 in)
Stopper
Frame
Master cylinder
Guide
Caliper
Stopper
Bolt

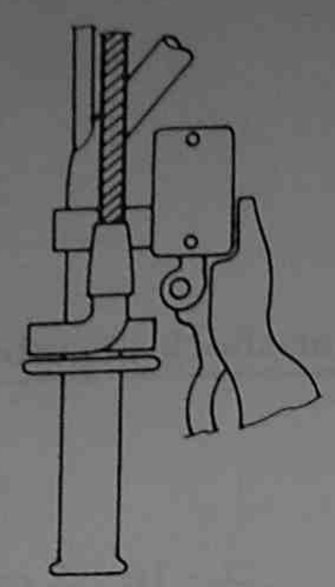

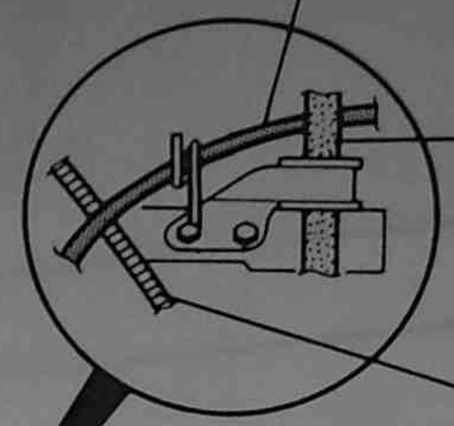
Clutch cable
Brake hose
Throttle cable

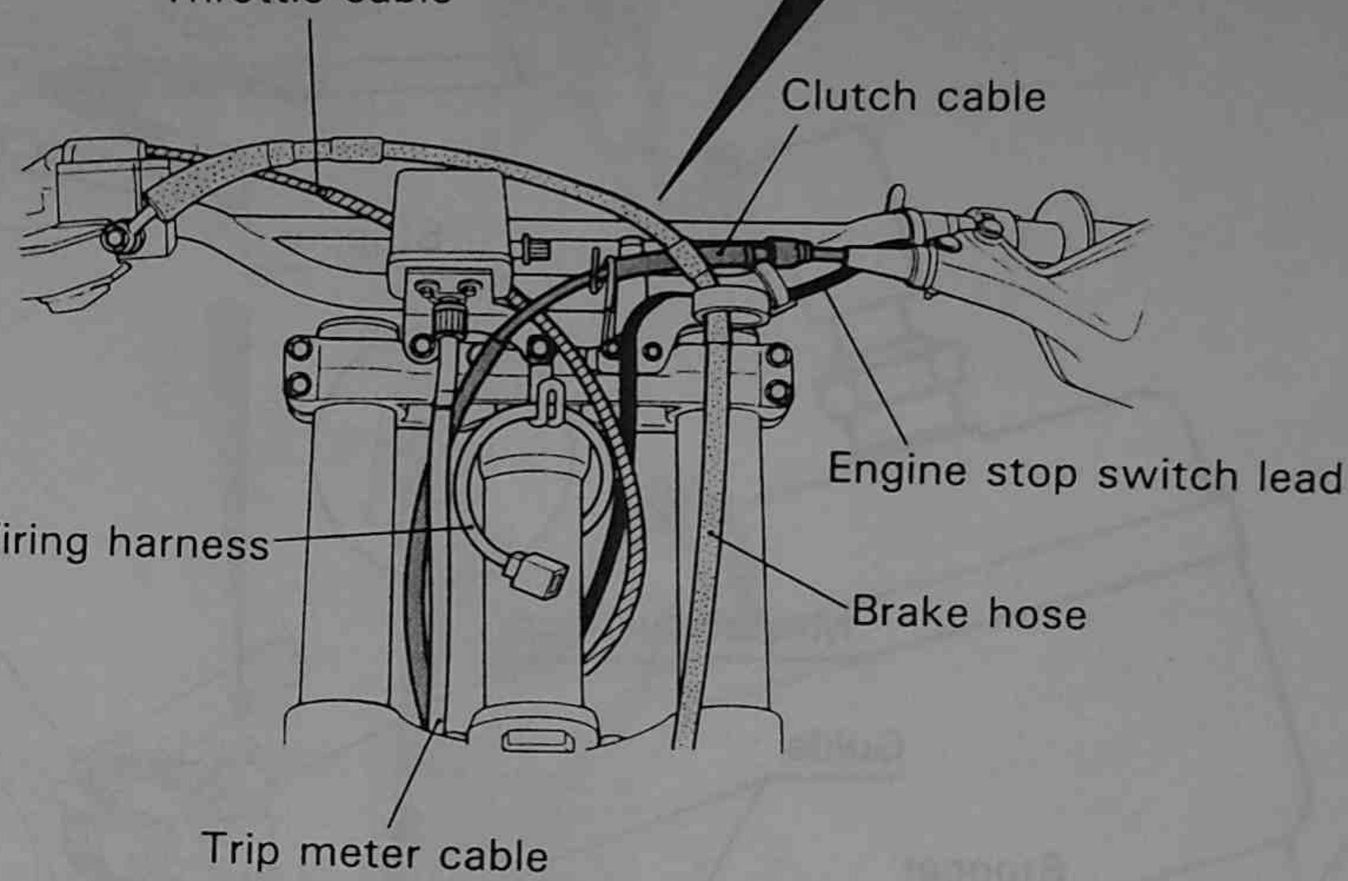
Throttle cable
Clutch cable
Engine stop switch lead
Wiring harness
Brake hose
Trip meter cable

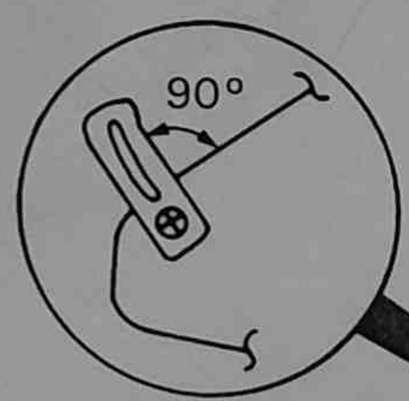
90°

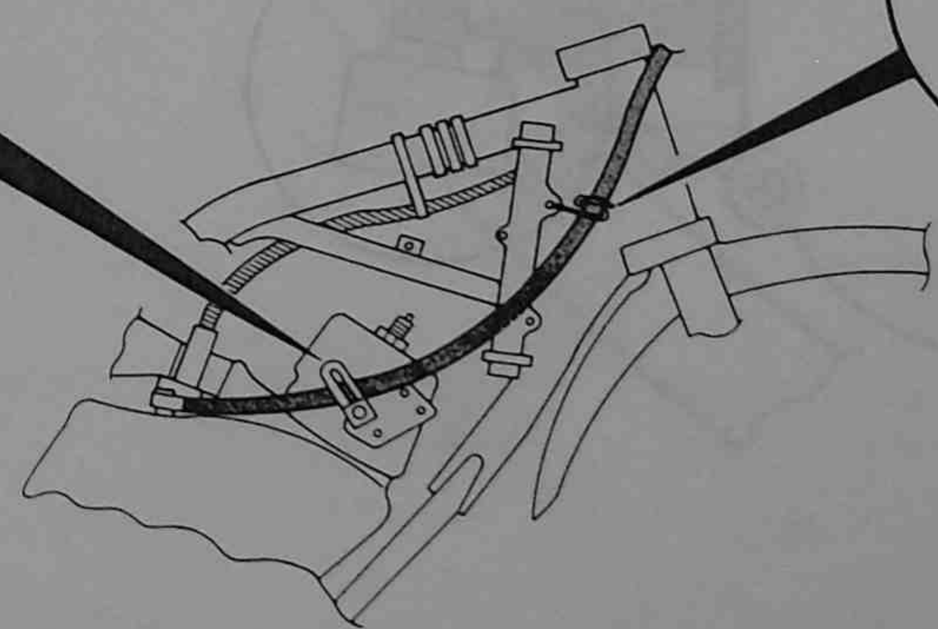

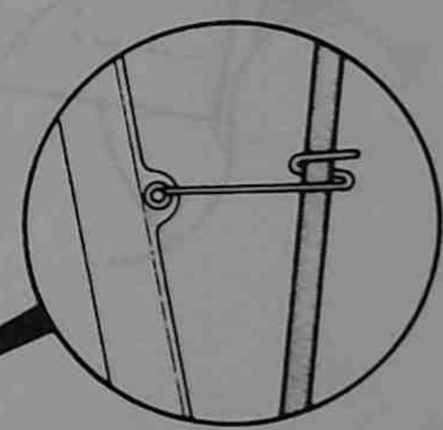

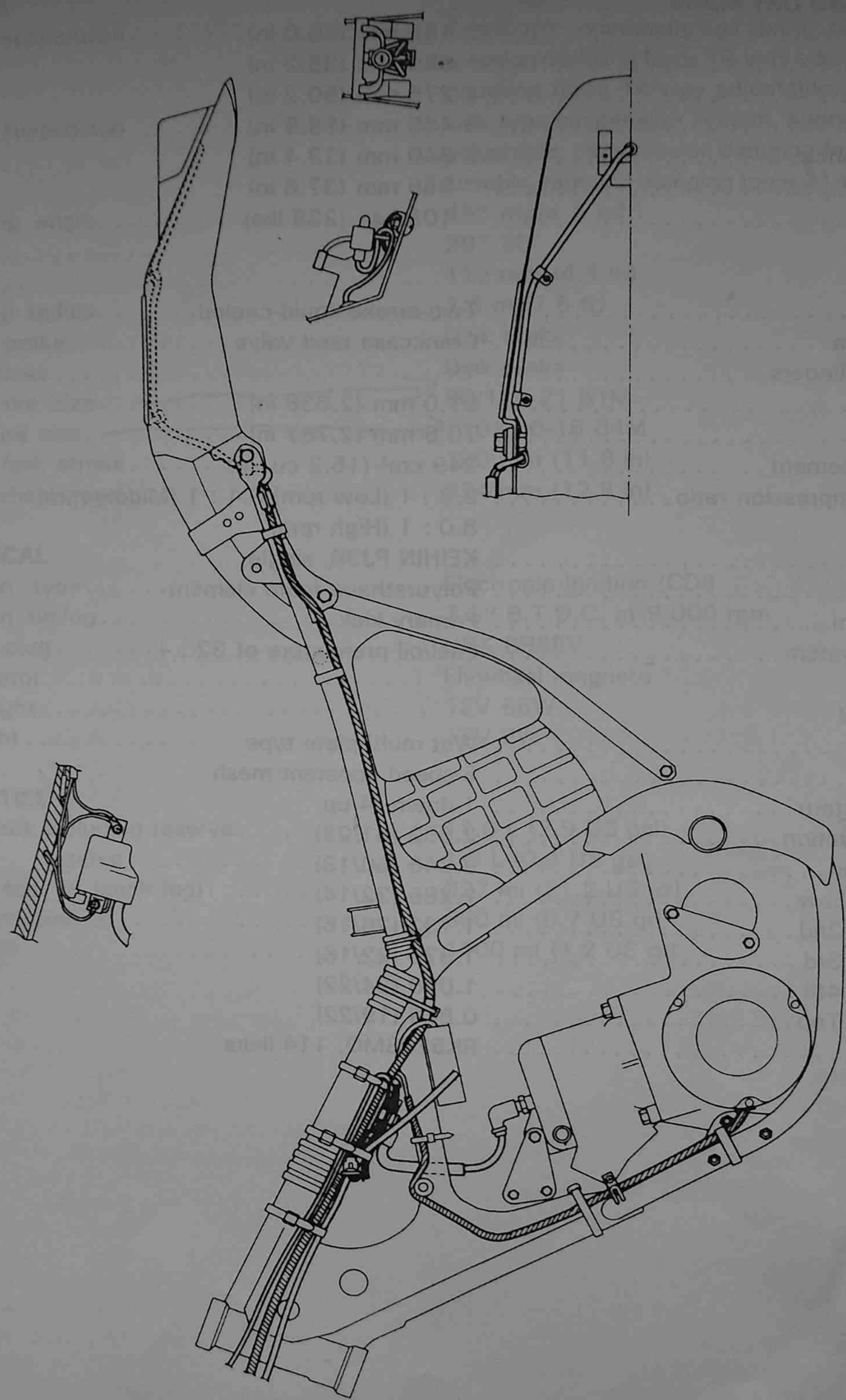

SPECIFICATIONS

DIMENSIONS AND DRY MASS

Overall length	2 185 mm (86.0 in)
Overall width	895 mm (35.2 in)
Overall height	1 275 mm (50.2 in)
Wheelbase	1 485 mm (58.5 in)
Ground clearance	340 mm (13.4 in)
Seat height	955 mm (37.6 in)
Dry mass	108 kg (238 lbs)

ENGINE

Type	Two-stroke liquid-cooled
Intake system	Crankcase reed valve
Number of cylinders	1
Bore	67.0 mm (2.638 in)
Stroke	70.8 mm (2.787 in)
Piston displacement	249 cm^3 (15.2 cu. in)
Corrected compression ratio	9.8 : 1 (Low rpm)/9.1 : 1 (Middle rpm)/ 8.0 : 1 (High rpm)
Carburetor	KEIHIN PJ38, single
Air cleaner	Polyurethane foam element
Starter system	Primary kick
Lubrication system	Fuel/oil premixture of 32 : 1

TRANSMISSION

Clutch	Wet multi-plate type
Transmission	5-speed constant mesh
Gearshift pattern	1-down, 4-up
Primary reduction	2.652 (61/23)
Final reduction	3.846 (50/13)
Gear ratios, Low	2.285 (32/14)
2nd	1.733 (26/15)
3rd	1.375 (22/16)
4th	1.090 (24/22)
Top	0.863 (19/22)
Drive chain	RK520SMO, 114 links

CHASSIS

Front suspension	Telescopic, pneumatic/coil spring, oil damped compression damping force 18-way adjustable, rebound damping force 14-way adjustable.
Rear suspension	Link type suspension system, spring pre-load fully adjustable, compression damping force 21-way adjustable, rebound damping force 21-way adjustable.
Steering angle	45° (right & left)
Caster	28° 30′
Trail	113 mm (4.4 in)
Turning radius	2.3 m (7.5 ft)
Front brake	Disk brake
Rear brake	Disk brake
Front tire size	80/100-21 51M
Rear tire size	110/100-18 64M
Front fork stroke	300 mm (11.8 in)
Rear wheel travel	324 mm (12.8 in)

ELECTRICAL

Ignition type	Electronic Ignition (CDI)
Ignition timing	7.5° B.T.D.C. at 9 000 rpm
Spark plug	NGK BR9EV
Generator	Flywheel magneto
Headlight	12V 55W
Taillight	12V 5W

CAPACITIES

Fuel tank including reserve	11.0 L (2.9 US gal)
reserve	1.6 L (0.4 US gal)
Front fork oil (each leg)	627 ml (21.2 US oz)
Transmission oil	650 ml (0.7 US qt)
Coolant	1100 ml (1.2 US qt)